Mech-Elec®

RCE-EC

ECODESIGN HEAT RECOVERY UNITS CATALOGUE 2018

Mech-Elec® Irl.
http://www.mech-elec.ie
T: +353 1 450 8822 | F: +353 1 4508227 |
Head Office, Unit B4, Calmount Business Park,
Dublin D12WR61, Ireland.

Mech-Elec UK
http://www.mech-elec.net
T: +44 2034324118|
Unit 1, Bretts Farm, Romford Road, Aveley, Essex, RM15 4XD,
England.
Ventilation | Fans | Grilles | Chilled Beams | Smoke Extract | Heat Recovery | Air Handling Units | Fan Coil Units | Air Curtains

How it works

Units include a heat exchanger and two fans, one to extract air from the indoor environment and one to supply fresh air from outside.

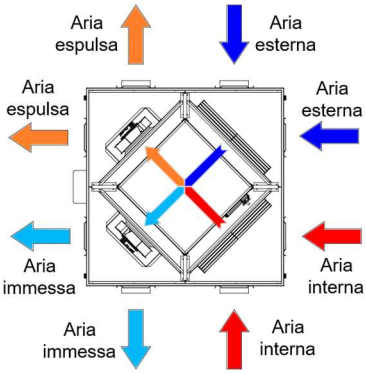

Inside the heat recovery unit both exhaust air and fresh air flows through an aluminium crossflow heat exchanger without mixing together, but transferring heat from the warmer air stream to the cooler one.

A motorized shutter can be used to by-pass the heat exchanger, for example to achieve free-heating in winter or free cooling in summer.

Standard features

- Machines can be equipped with both medium and high efficiency heat exchangers, in accordance with Directive 2009/125/CE, regulation n. 1253/2014 (*Eco Design*).
- Equipped with EC (high efficiency) electrical fans (IP 54). They allow for smaller aerodynamic losses thanks to the use of high intensity neodymium magnets, a new compact design and no obstruction of intake due to a build-on control unit.
- Forward bladed double inlet units (size 1600 and greater) can be setup to work at either constant flow rate or constant static pressure using a PC. Fans installed in those units already comply with both IE5 and ERP2020 efficiency limits.
- Each fan speed can be adjusted step by step and independently from the other.
- Two temperature sensors, one for supply air and one for exaust air.
- A by-pass motorized damper (IP 54 actuator) which can be controlled either manually or automatically.
- Ready to be fitted with either a carbon dioxide or humidity sensor (both are optional).
- Includes a static pressure sensor to monitor the status of the filters installed on the supply side.
- Casing made of galvanized steel sheets for models up to size 5800, while for sizes 7200 and 7700 casing is made of aluminium Pentapost frames and pre-galvanised steel sandwich panels, each filled with 23mm thick polyurethane (40 kg/m^3) for thermal and acoustic insulation.
- Painted and galvanized sheet steel case, equipped with a condense discharge drop tank. A plastic, transparent tube extending for about 50 mm outside of the unit is connected to such drop tank, so that it is possible to connect the unit to an external condense discharge tube.
- Acoustic insulation fire-retardant lining on the lower cover panel.
- Circular connections with supply and exhaust ducts can be fixed on each side of the HRU, thus easing installation of the machines.
- Air filters can be easily inspected and removed thanks to dedicated hatches built in the unit cover.
- Air filters in accordance with RITE regulation where necessary (M6/F7/F8/F9 classes).
- Equipped electric control board is IP 55 protected. All units can be mounted/installed outdoor when equipped with a cover.
- Easy installation thanks to our "*plug and play*" system.
- Equipped with type "DeG" controller (base and remote).

"DeG" base controller

- Equipped with an RS485 port that allows different management configurations:
  - connection to a single "DeG" remote controller;
  - full compatibility with the MODBUS interface starting from May 2017 (please ask for confirmation when placing an order);
  - up to six base controllers can be linked together using a cascade connection and be managed using a single "DeG" remote controller. In such configuration all units are equipped with a static pressure sensor, but only the first unit is fitted with temperature and carbon dioxide sensors (the latter is optional). The remote controller is also connected to the first unit only. All units share the same settings and it is not possible to set each unit independently from the others. The filter status LED on the remote lights up whenever one or more units need to have their filters changed.
- Two operating modes:
  - "Manual", where the user can directly set both the supply and exhaust ventilators speed and command the motorized by-pass shutter (open and close). It is also possible to set one ventilator to operate at a fixed speed fraction of the other one.
    If a carbon dioxide sensor is installed, then read values are displayed on the remote.
  - "Automatic", where both fans speed and by-pass are autonomously managed by the controller without any user interventions.

    Fans speed are automatically variated in order to maintain the level of carbon dioxide inside the room below the user defined set point. A user can however set the minimum fan speed inside a 4% - 20% value range.
    By-pass is closed/opened according to both the indoor temperature value and the user defined set point.

"DeG" remote controller

"DeG" backlight monochromatic LCD display, equipped with a led signalling when filters need to be changed (disabled if a static pressure sensor is not installed). A RS485 port is used to connect the heat recovery unit to the remote, which can be positioned up to 200 [m] away (or up to 1500 [m] on specific request).

"DeG" mini PC

Instead of the standard remote controller detailed above it is possible to install a mini PC equipped with a touch screen. This controller allows the user to manage up to 32 units at the same time and each unit can be configured independently from the others (available from May 2017, please ask for confirmation when placing an order). A RS485 port is used to connect the heat recovery units to the mini PC, which can be positioned up to 200 [m] away (or up to 1500 [m] on specific request).

Horizontal setup

Horizontal backward bladed models (sizes 750 and 1350) can have their inlet and outlet connections repositioned as the user see fit, while for all other models a customer needs to specify which configuration (as shown here below) he desires.

ALL VIEWS ARE INTENDED FROM BELOW (COVER SIDE)

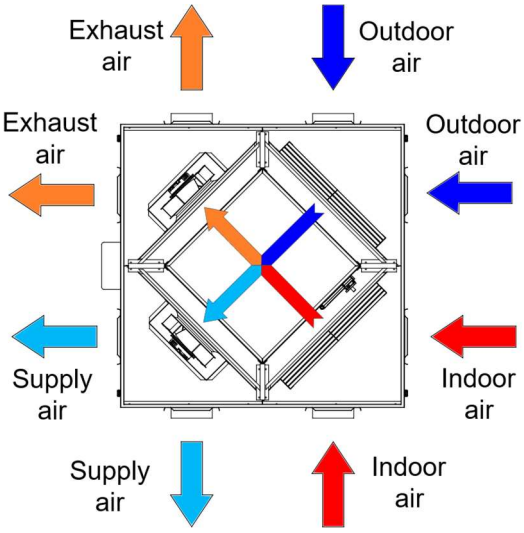

Backward bladed models

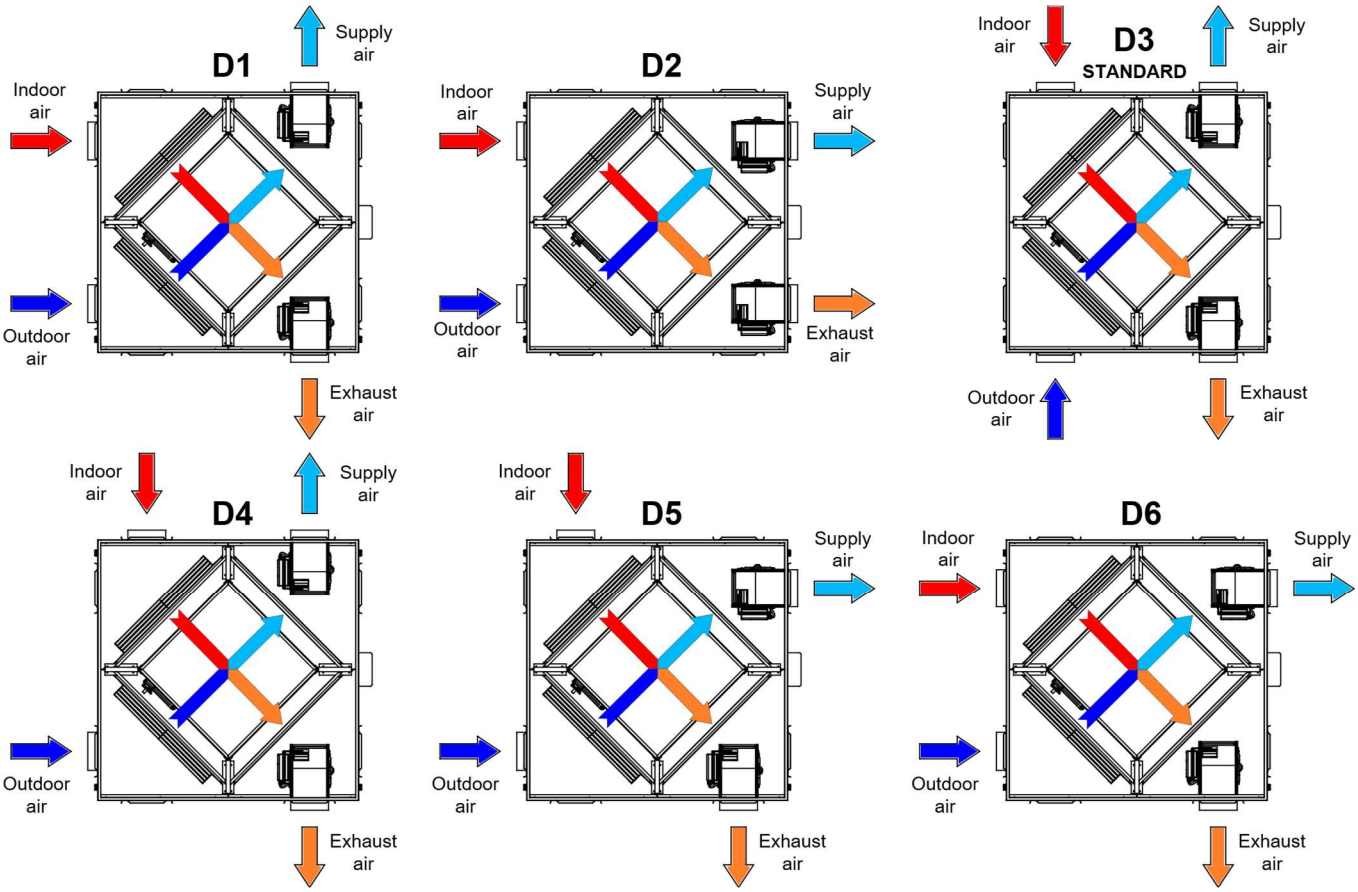

Forward bladed models

Vertical setup

All configurations listed below are valid for all models, both backward and forward bladed ones.

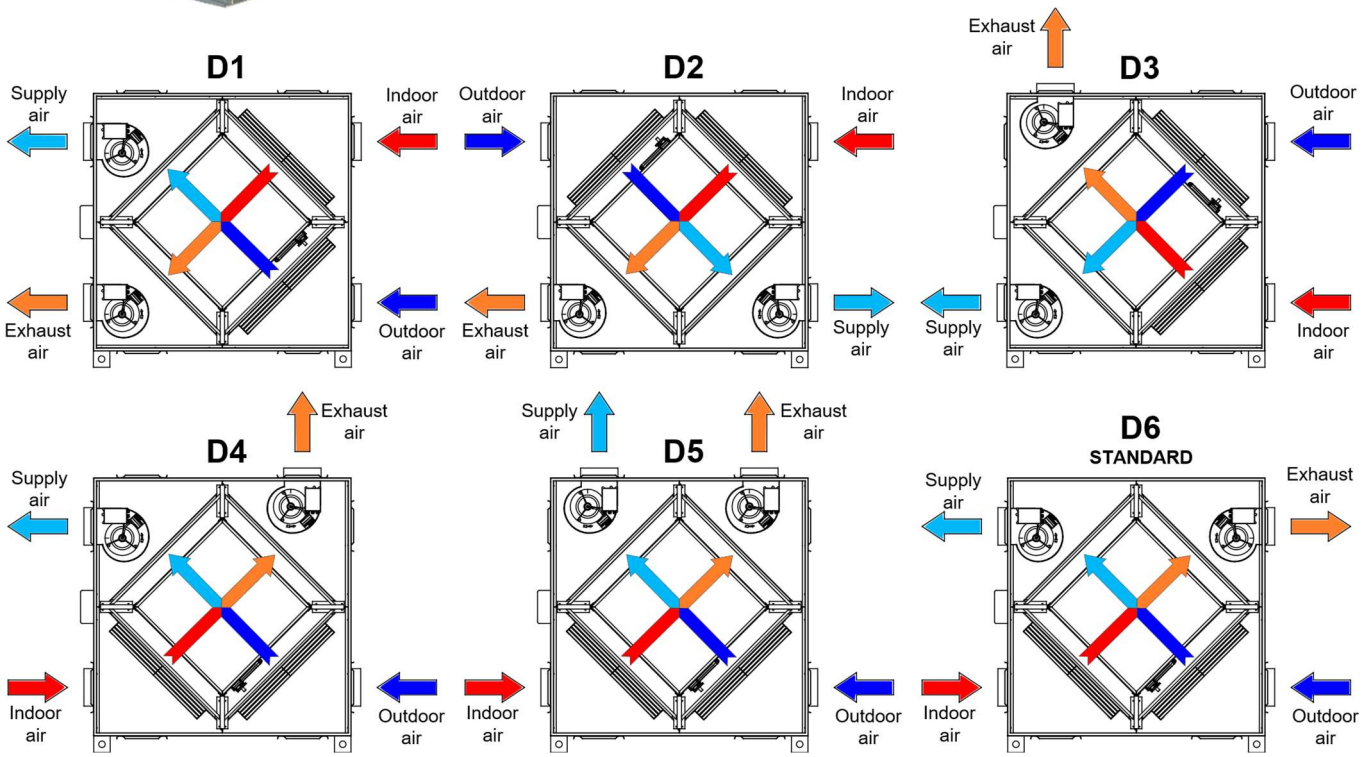

All models

Heat exchangers

All RCE models come with high efficiency crossflow heat exchangers (minimum 73% with dry air and ΔT 20 [°C]).

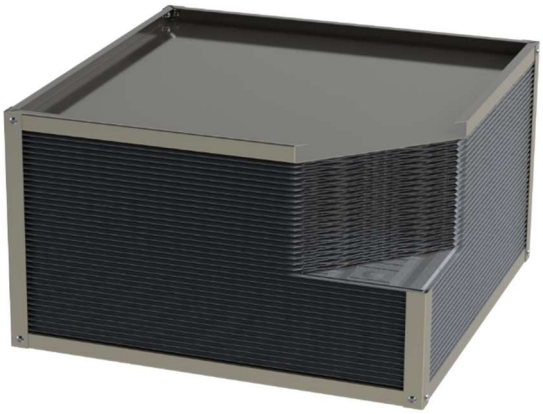

Dimensions [mm] and **weight** [kg]

Model	A1	A2	B	C	D	øE	F	G	H	L	M	Hor [kg]	Vert [kg]
RCE-0700Q-SW-EC	1000	1000	905	1060	375	150	250	500	100	1200	450	70,0	80,0
RCE-1000Q-SW-EC	1000	1000	905	1060	375	150	250	500	100	1200	450	70,0	80,5
RCE-1300Q-SW-EC	1200	1200	1105	1260	525	250	300	600	100	1450	610	110,0	117,0
RCE-1600Q-SW-EC	1200	1200	1105	1260	525	250	300	600	100	1450	610	110,0	120,0
RCE-2500Q-SW-EC	1200	1200	1105	1260	525	315	275	650	100	1450	610	124,0	135,0
RCE-2800Q-SW-EC	1350	1350	1255	1410	575	315	300	750	100	1650	670	161,0	167,0
RCE-3100Q-SW-EC	1350	1350	1255	1410	675	315	300	750	100	1650	770	178,0	183,0
RCE-3700Q-SW-EC	1350	1350	1255	1410	675	350	325	700	100	1650	770	178,0	183,0
RCE-4500Q-SW-EC	1350	1350	1255	1410	775	350	300	750	100	1550	850	215,0	245,0
RCE-4900Q-SW-EC	1650	1650	1080	1710	775	350	285	1080	100	1900	850	215,0	245,0
RCE-5200Q-SW-EC	1650	1650	1080	1710	775	350	285	1080	100	1900	850	302,0	320,0
RCE-5800Q-SW-EC	1650	1650	1080	1710	920	350	355	940	100	1900	1000	302,0	320,0
RCE-7200Q-SW-EC	2150	2150	--	2210	1075	600	425	1300	100	2200	1130	500,0	550,0
RCE-7700Q-SW-EC	2150	2150	--	2210	1075	600	425	1300	100	2200	1130	500,0	550,0

Heat recovery units with single inlet, backward bladed fans

VERTICAL

RCE/V

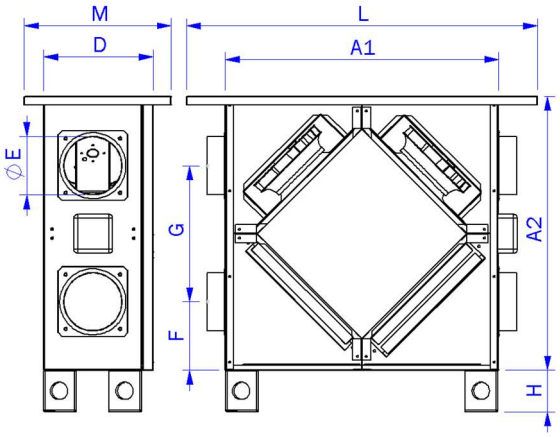

Packaging: L x H x P

HORIZONTAL

RCE/H

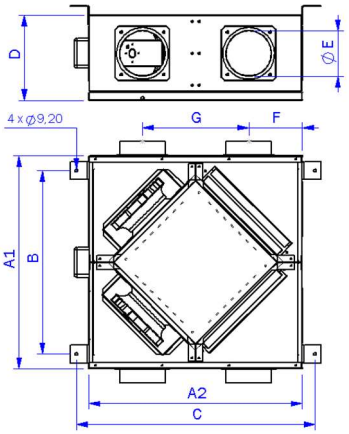

Packaging: L x H x P

Heat recovery units with double inlet, forward bladed fans

VERTICAL

RCE/V

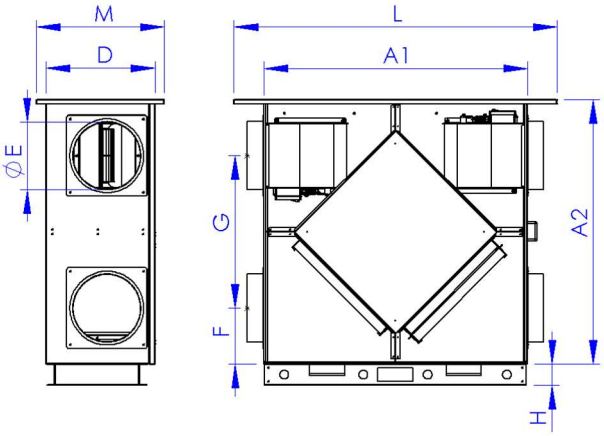

Packaging: L x H x P

HORIZONTAL

RCE/H

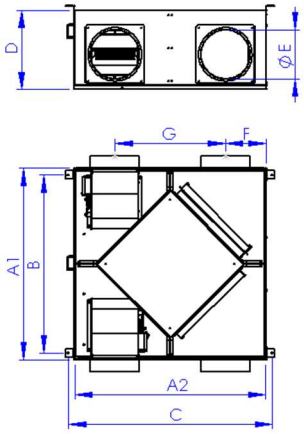

Packaging: L x H x P

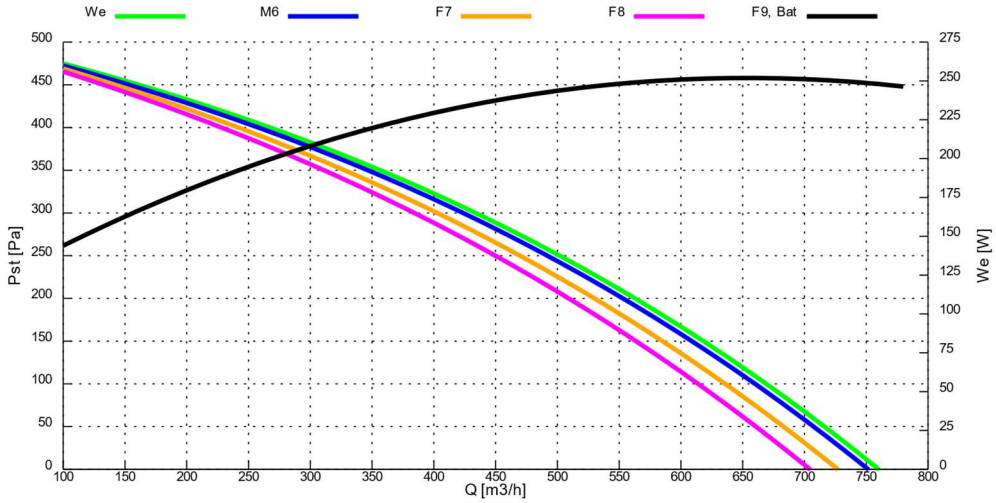

Maximum thermal efficiency of heat recovery: ***86,0*** *[%] (R.H. 80 [%], T_{in} -5 [°C], T_{out} 20 [°C])*

Air flow rate @ 50 [Pa]	710	[m³/h]	0,197	[m³/s]
Air flow rate @ 150 [Pa]	610	[m³/h]	0,169	[m³/s]

Nominal data (*Directive 2009/125/CE, regulation n. 1253/2014*)

Nominal flow rate (q_{nom})	[m³/h]	720
	[m³/s]	0,200
Effective electric power input ($W_{e,eff}$)	[kW]	250
Internal specific fan power of ventilation components (SFP_{int})	[W/(m³/s)]	1077
Internal specific fan power of ventilation components, 2016 limit	[W/(m³/s)]	1092
Face velocity at design flow rate	[m/s]	1,60
Nominal external pressure ($\Delta p_{s,ext}$)	[Pa]	36
Internal pressure drop of ventilation components ($\Delta p_{s,int}$), supply	[Pa]	241
Internal pressure drop of ventilation components ($\Delta p_{s,int}$), exhaust	[Pa]	246
Thermal efficiency of heat recovery (η_t, dry air ΔT 20 [°C])	*[%]*	73,7%
Casing sound power level (L_{WA})	[dB]	59,9
Maximum external leakage rate	max 3,5 @ -400 Pa (EN 13141-7)	
Maximum internal leakage rate	max 5,5 @ +250 Pa (EN 13141-7)	

- Nominal values are referred to a configuration (“*F7*” line on the above chart) where fans operate at a working voltage of 10 [V] and two filters made of acrylic material are installed: a class F7 on the supply side and a class M6 on the exhaust side. The above “flow/pressure” graphic shows data taken from the supply side.
- Bidirectional (UVB) non-residential ventilation unit (NRVU).
- Heat recovery system: other (air/air).
- Installed drive: continuous 10 V regulation.
- Motorized by-pass facility can be controlled manually and automatically through remote display. The latter is not supported by all remote displays.
- All units are equipped with two temperature sensors, one for inside air and one for outside air.
- All units are equipped with a differential static pressure sensor, which once connected to the unit remote display will show the filters status through an appropriate indicator.
- Additional features and options may be available depending on the selected controller.

Electric motors nominal data

Volt. [V]	Phase [-]	Freq. [Hz]	I_{nom}[1] [A]	Pot_{nom}[1] [W]	V_{nom}[1] [rpm]
230±15%	1~	50/60	0,84	120	2842

(1) Assuming working voltage is 10 V.

Noise levels

SWL[1] [dB] octave band [Hz]								SWL[2]		SPL[3] case	
63	125	250	500	1000	2000	4000	8000	[dB]	[dB(A)]	1m [dB(A)]	3m [dB(A)]
72,4	78,9	75,9	71,1	71,8	74,7	72,7	69,0	72,4	80	51	46

1 = sound power listed by octave band.
2 = total sound power.
3 = sound pressure, measured respectively at 1 [m] and 3 [m] from the unit case.

Flow rate vs thermal efficiency of heat recovery

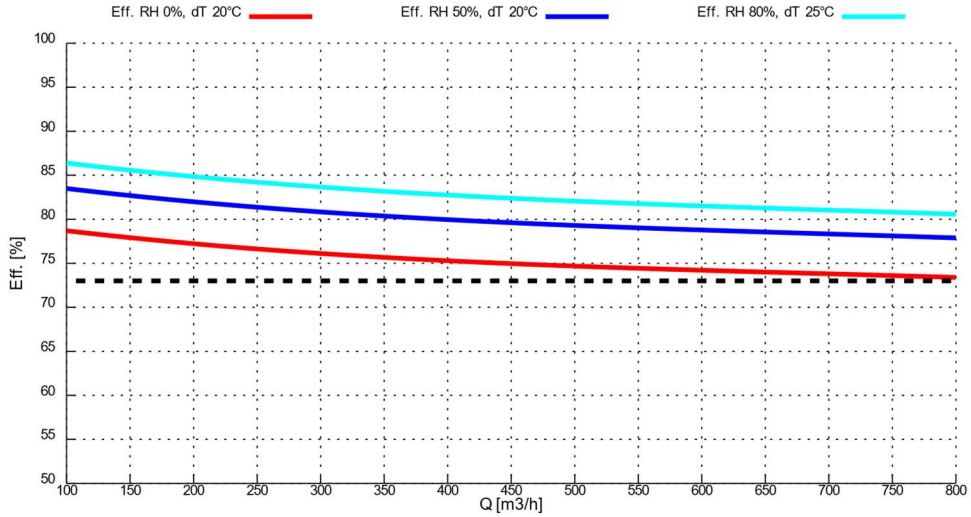

Dimensions [mm] and weight [kg]

A1	A2	B	C	D	øE	F	G	H	L	M	Weight H	Weight V
1000	1000	905	1060	375	150	250	500	100	1200	450	70,0	80,0

VERTICAL

RCE/V

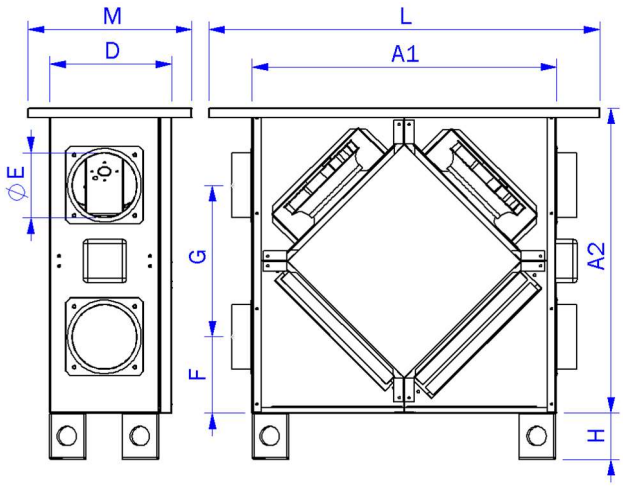

Imballo: L x H x P

HORIZONTAL

RCE/H

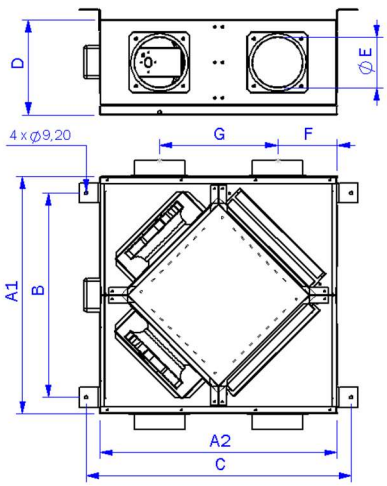

Imballo: L x H x P

Filters dimensions: 240 x 240 x 25 [mm]

RCE Series

Heat Recovery Units RCE-1000Q-SW-EC

Aspirnova Industry S.r.l.
Via Della Giardina, 11
20900 Monza MB
info@aspirnova.com
www.aspirnova.com

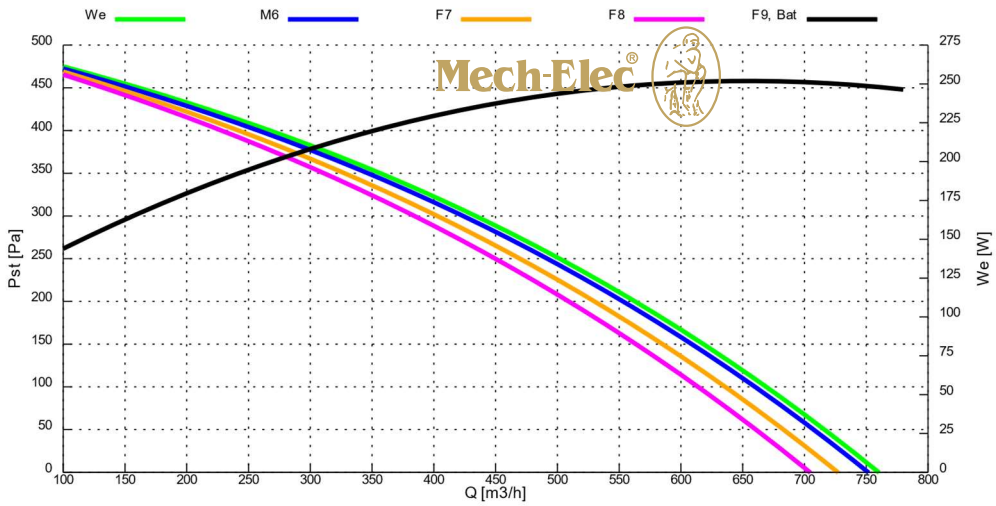

Maximum thermal efficiency of heat recovery: ***86,0*** *[%] (R.H. 80 [%], T_{in} -5 [°C], T_{out} 20 [°C])*

Air flow rate @ 50 [Pa]	1030	[m³/h]	0,286	[m³/s]
Air flow rate @ 150 [Pa]	950	[m³/h]	0,264	[m³/s]

Nominal data (*Directive 2009/125/CE, regulation n. 1253/2014*)

Nominal flow rate (q_{nom})	[m³/h]	720
	[m³/s]	0,200
Effective electric power input ($W_{e,eff}$)	[kW]	0,538
Internal specific fan power of ventilation components (SFP_{int})	[W/(m³/s)]	1089
Internal specific fan power of ventilation components, 2016 limit	[W/(m³/s)]	1090
Face velocity at design flow rate	[m/s]	1,5
Nominal external pressure ($\Delta p_{s,ext}$)	[Pa]	348
Internal pressure drop of ventilation components ($\Delta p_{s,int}$), supply	[Pa]	241
Internal pressure drop of ventilation components ($\Delta p_{s,int}$), exhaust	[Pa]	246
Thermal efficiency of heat recovery (η_t, dry air ΔT 20 [°C])	*[%]*	73,6
Casing sound power level (L_{WA})	[dB]	60,9
Maximum external leakage rate	max 3,5 @ -400 Pa (EN 13141-7)	
Maximum internal leakage rate	max 5,5 @ +250 Pa (EN 13141-7)	

- Nominal values are referred to a configuration (“*F7*” line on the above chart) where fans operate at a working voltage of 10 [V] and two filters made of acrylic material are installed: a class F7 on the supply side and a class M6 on the exhaust side. The above “flow/pressure” graphic shows data taken from the supply side.
- Bidirectional (UVB) non-residential ventilation unit (NRVU).
- Heat recovery system: other (air/air).
- Installed drive: continuous 10 V regulation.
- Motorized by-pass facility can be controlled manually and automatically through remote display. The latter is not supported by all remote displays.
- All units are equipped with two temperature sensors, one for inside air and one for outside air.
- All units are equipped with a differential static pressure sensor, which once connected to the unit remote display will show the filters status through an appropriate indicator.
- Additional features and options may be available depending on the selected controller.

Electric motors nominal data

Volt. [V]	Phase [-]	Freq. [Hz]	I_{nom}[1] [A]	Pot_{nom}[1] [W]	V_{nom}[1] [rpm]
230±15%	1~	50/60	1,76	274	2573

(1) Assuming working voltage is 10 V.

Noise levels

SWL[1] [dB] octave band [Hz]								SWL[2]		SPL[3] case	
63	125	250	500	1000	2000	4000	8000	[dB]	[dB(A)]	1m [dB(A)]	3m [dB(A)]
90,7	83,5	89,0	84,2	79,5	80,4	80,3	76,8	90,7	89	59	53

1 = sound power listed by octave band.
2 = total sound power.
3 = sound pressure, measured respectively at 1 [m] and 3 [m] from the unit case.

Flow rate vs thermal efficiency of heat recovery

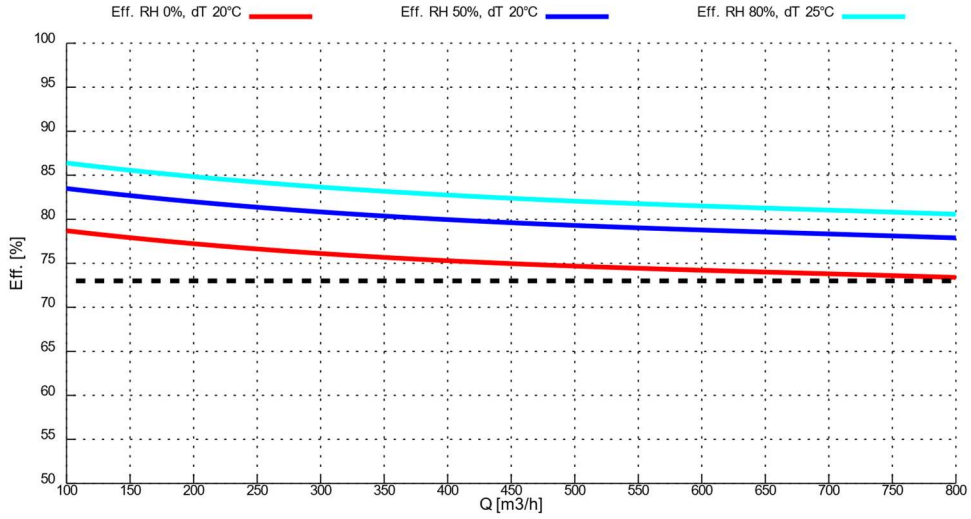

Dimensions [mm] and weight [kg]

A1	A2	B	C	D	øE	F	G	H	L	M	Weight H	Weight V
1000	1000	905	1060	375	150	250	500	100	1200	450	70,0	80,0

VERTICAL

RCE/V

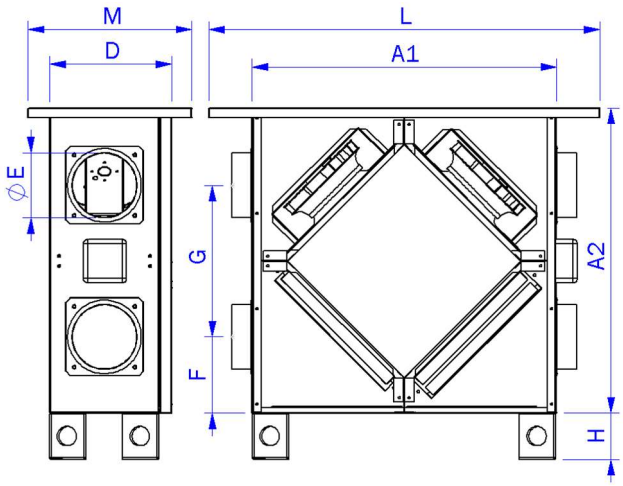

Imballo: L x H x P

HORIZONTAL

RCE/H

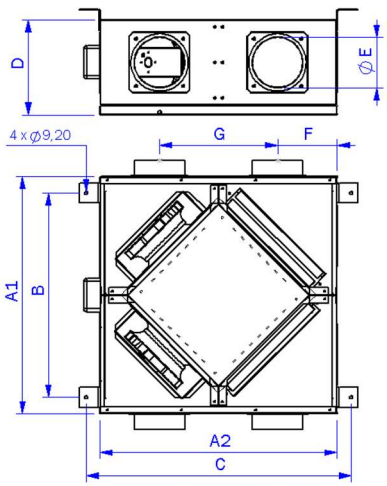

Imballo: L x H x P

Filters dimensions: 240 x 240 x 25 [mm]

RCE Series

Heat Recovery Units RCE-1300Q-SW-EC

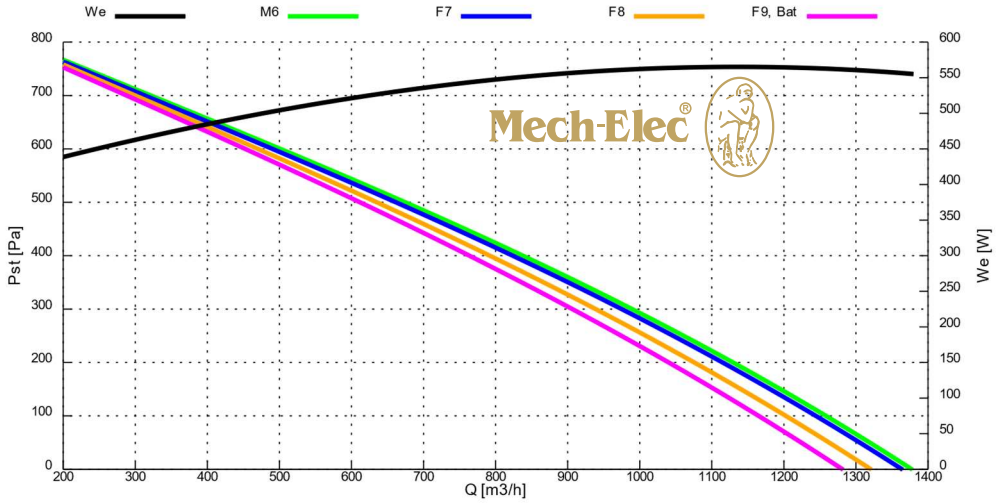

Maximum thermal efficiency of heat recovery: ***88,0*** *[%] (R.H. 80 [%], T_{in} -5 [°C], T_{out} 20 [°C])*

Air flow rate @ 50 [Pa]	1300	[m³/h]	0,361	[m³/s]
Air flow rate @ 150 [Pa]	1180	[m³/h]	0,328	[m³/s]

Nominal data[1] (*Directive 2009/125/CE, regulation n. 1253/2014*)

Nominal flow rate (q_{nom})	[m³/h]	1160
	[m³/s]	0,322
Effective electric power input ($W_{e,eff}$)	[kW]	565
Internal specific fan power of ventilation components (SFP_{int})	[W/(m³/s)]	1092
Internal specific fan power of ventilation components, 2016 limit	[W/(m³/s)]	1113
Face velocity at design flow rate	[m/s]	1,60
Nominal external pressure ($\Delta p_{s,ext}$)	[Pa]	166
Internal pressure drop of ventilation components ($\Delta p_{s,int}$), supply	[Pa]	281
Internal pressure drop of ventilation components ($\Delta p_{s,int}$), exhaust	[Pa]	287
Thermal efficiency of heat recovery (η_t, dry air ΔT 20 [°C])	*[%]*	75,0
Casing sound power level (L_{WA})	[dB]	60,9
Maximum external leakage rate	max 3,5 @ -400 Pa (EN 13141-7)	
Maximum internal leakage rate	max 5,5 @ +250 Pa (EN 13141-7)	

- Nominal values are referred to a configuration (“*F7*” line on the above chart) where fans operate at a working voltage of 10 [V] and two filters made of acrylic material are installed: a class F7 on the supply side and a class M6 on the exhaust side. The above “flow/pressure” graphic shows data taken from the supply side.
- Bidirectional (UVB) non-residential ventilation unit (NRVU).
- Heat recovery system: other (air/air).
- Installed drive: continuous 10 V regulation.
- Motorized by-pass facility can be controlled manually and automatically through remote display. The latter is not supported by all remote displays.
- All units are equipped with two temperature sensors, one for inside air and one for outside air.
- All units are equipped with a differential static pressure sensor, which once connected to the unit remote display will show the filters status through an appropriate indicator.
- Additional features and options may be available depending on the selected controller.

Electric motors nominal data

Volt. [V]	Phase [-]	Freq. [Hz]	I_{nom}[1] [A]	Pot_{nom}[1] [W]	V_{nom}[1] [rpm]
230±15%	1~	50/60	1,76	274	2573

(1) Assuming working voltage is 10 V.

Noise levels

SWL[1] [dB] octave band [Hz]								SWL[2]		SPL[3] case	
63	125	250	500	1000	2000	4000	8000	[dB]	[dB(A)]	1m [dB(A)]	3m [dB(A)]
90,7	83,5	89,0	84,2	79,5	80,4	80,3	76,8	90,7	89	59	53

1 = sound power listed by octave band.
2 = total sound power.
3 = sound pressure, measured respectively at 1 [m] and 3 [m] from the unit case.

Flow rate vs thermal efficiency of heat recovery

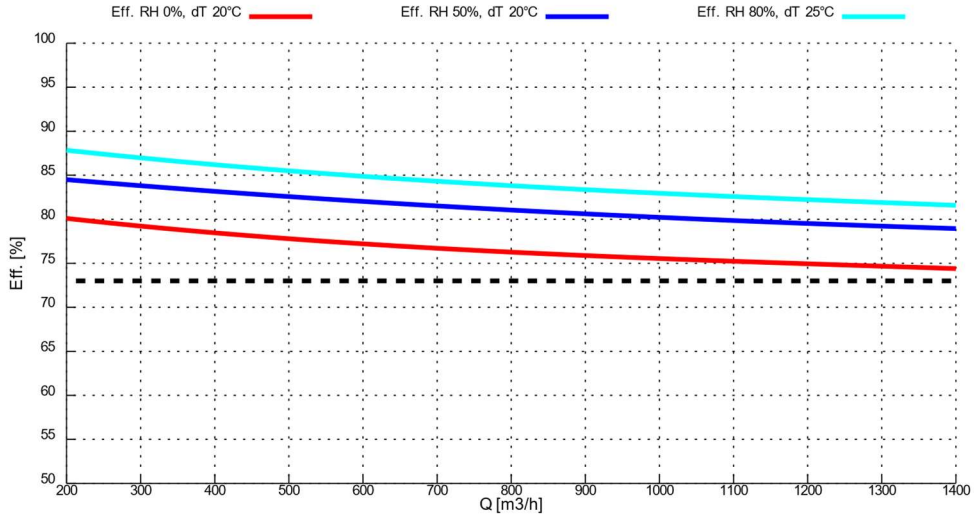

Dimensions [mm] and weight [kg]

A1	A2	B	C	D	øE	F	G	H	L	M	Weight H	Weight V
1200	1200	1105	1260	525	250	300	600	100	1450	610	110,0	117,0

VERTICAL
RCE/V

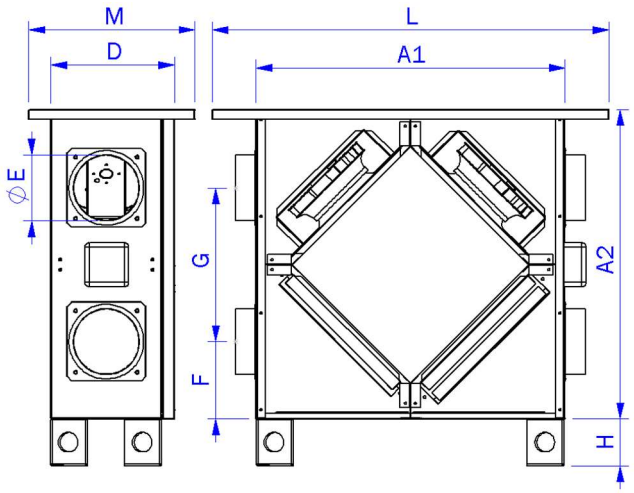

Imballo: L x H x P

HORIZONTAL
RCE/H

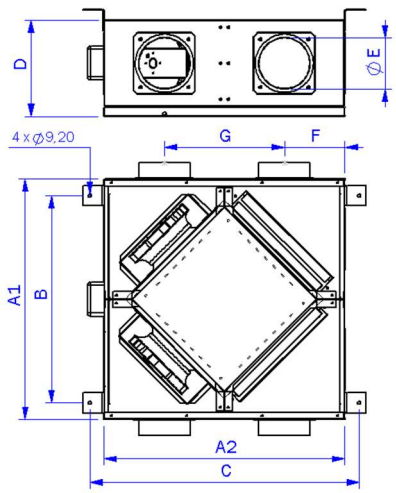

Imballo: L x H x P

Filters dimensions: 500 x 400 x 48 [mm]

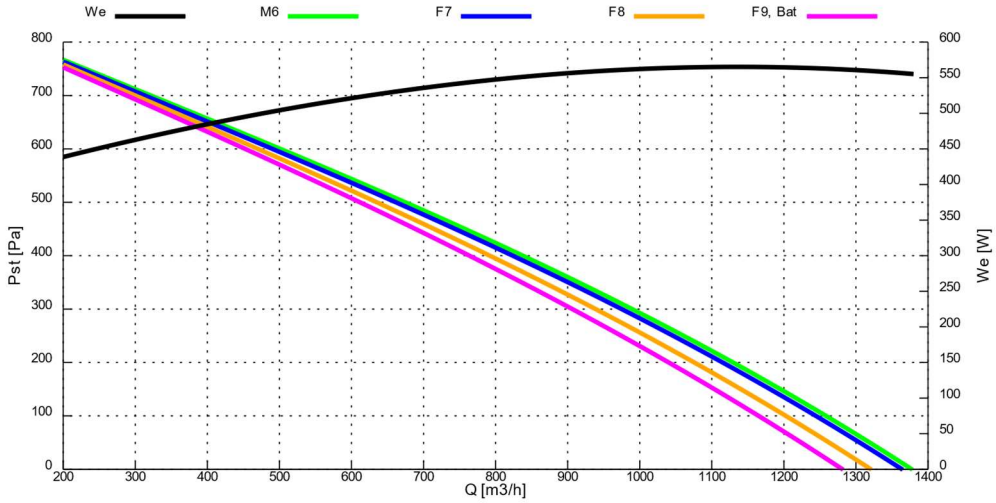

Maximum thermal efficiency of heat recovery: ***88,0*** *[%] (R.H. 80 [%], T_{in} -5 [°C], T_{out} 20 [°C])*

Air flow rate @ 50 [Pa]	1580	[m³/h]	0,439	[m³/s]
Air flow rate @ 150 [Pa]	1380	[m³/h]	0,383	[m³/s]

Nominal data[1] (*Directive 2009/125/CE, regulation n. 1253/2014*)

Nominal flow rate (q_{nom})	[m³/h]	1250
	[m³/s]	0,347
Effective electric power input ($W_{e,eff}$)	[kW]	0,850
Internal specific fan power of ventilation components (SFP_{int})	[W/(m³/s)]	1046
Internal specific fan power of ventilation components, 2016 limit	[W/(m³/s)]	1048
Face velocity at design flow rate	[m/s]	2,6
Nominal external pressure ($\Delta p_{s,ext}$)	[Pa]	220
Internal pressure drop of ventilation components ($\Delta p_{s,int}$), supply	[Pa]	322
Internal pressure drop of ventilation components ($\Delta p_{s,int}$), exhaust	[Pa]	354
Thermal efficiency of heat recovery (η_t, dry air ΔT 20 [°C])	*[%]*	74,2
Casing sound power level (L_{WA})	[dB]	68,7
Maximum external leakage rate	max 3,5 @ -400 Pa (EN 13141-7)	
Maximum internal leakage rate	max 5,5 @ +250 Pa (EN 13141-7)	

- Nominal values are referred to a configuration (“*F7*” line on the above chart) where fans operate at a working voltage of 10 [V] and two filters made of acrylic material are installed: a class F7 on the supply side and a class M6 on the exhaust side. The above “flow/pressure” graphic shows data taken from the supply side.
- Bidirectional (UVB) non-residential ventilation unit (NRVU).
- Heat recovery system: other (air/air).
- Installed drive: continuous 10 V regulation.
- Motorized by-pass facility can be controlled manually and automatically through remote display. The latter is not supported by all remote displays.
- All units are equipped with two temperature sensors, one for inside air and one for outside air.
- All units are equipped with a differential static pressure sensor, which once connected to the unit remote display will show the filters status through an appropriate indicator.
- Additional features and options may be available depending on the selected controller.

Electric motors nominal data

Volt. [V]	Phase [-]	Freq. [Hz]	I_{nom}[1] [A]	Pot_{nom}[1] [W]	V_{nom}[1] [rpm]
230±15%	1~	50/60	2,9	670	1995

(1) Assuming working voltage is 10 V.

Noise levels

SWL[1] [dB] octave band [Hz]								SWL[2]		SPL[3] case	
63	125	250	500	1000	2000	4000	8000	[dB]	[dB(A)]	1m [dB(A)]	3m [dB(A)]
102,4	84,2	88,7	79,6	79,0	78,9	78,6	71,6	102,4	86	60	55

1 = sound power listed by octave band.
2 = total sound power.
3 = sound pressure, measured respectively at 1 [m] and 3 [m] from the unit case.

Flow rate vs thermal efficiency of heat recovery

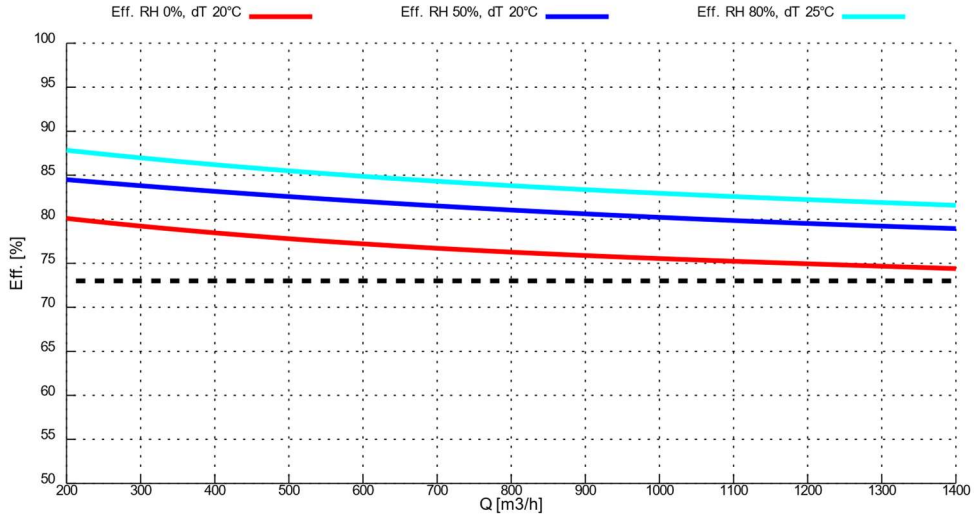

Dimensions [mm] and weight [kg]

A1	A2	B	C	D	øE	F	G	H	L	M	Weight H	Weight V
1200	1200	1105	1260	525	250	300	600	100	1450	610	110,0	117,0

VERTICAL

RCE/V

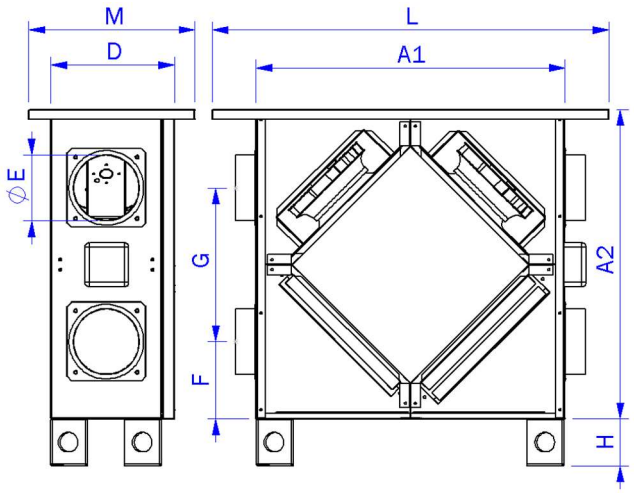

Imballo: L x H x P

HORIZONTAL

RCE/H

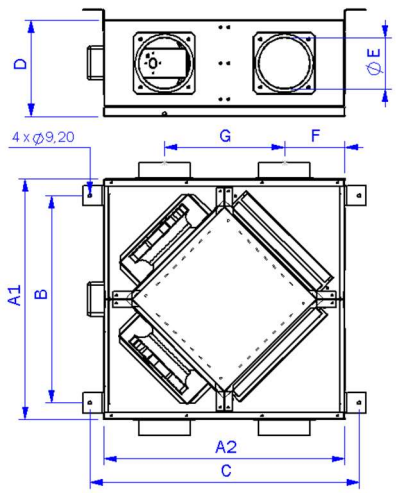

Imballo: L x H x P

Filters dimensions: 500 x 400 x 48 [mm]

RCE Series

Heat Recovery Units RCE-2500Q-SW-EC

Aspirnova Industry S.r.l.
Via Della Giardina, 11
20900 Monza MB
info@aspirnova.com
www.aspirnova.com

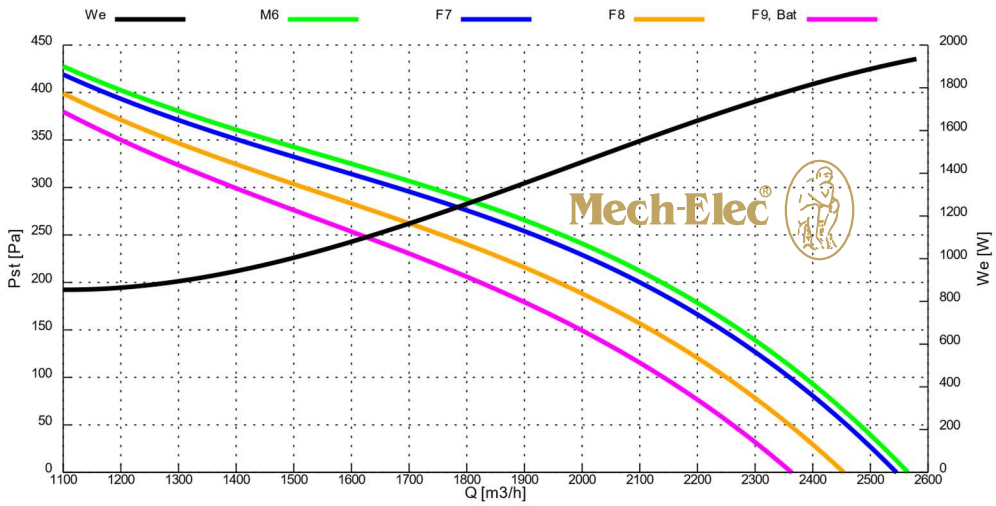

Maximum thermal efficiency of heat recovery: ***88,0*** *[%] (R.H. 80 [%], T_{in} -5 [°C], T_{out} 20 [°C])*

Air flow rate @ 50 [Pa]	2460	[m³/h]	0,683	[m³/s]
Air flow rate @ 150 [Pa]	2240	[m³/h]	0,622	[m³/s]

Nominal data (*Directive 2009/125/CE, regulation n. 1253/2014*)

Nominal flow rate (q_{nom})	[m³/h]	1680
	[m³/s]	0,467
Effective electric power input ($W_{e,eff}$)	[kW]	1147
Internal specific fan power of ventilation components (SFP_{int})	[W/(m³/s)]	1080
Internal specific fan power of ventilation components, 2016 limit	[W/(m³/s)]	1083
Face velocity at design flow rate	[m/s]	1,60
Nominal external pressure ($\Delta p_{s,ext}$)	[Pa]	299
Internal pressure drop of ventilation components ($\Delta p_{s,int}$), supply	[Pa]	240
Internal pressure drop of ventilation components ($\Delta p_{s,int}$), exhaust	[Pa]	245
Thermal efficiency of heat recovery (η_t, dry air ΔT 20 [°C])	*[%]*	74,8
Casing sound power level (L_{WA})	[dB]	68,7
Maximum external leakage rate	max 3,5 @ -400 Pa (EN 13141-7)	
Maximum internal leakage rate	max 5,5 @ +250 Pa (EN 13141-7)	

- Nominal values are referred to a configuration (“*F7*” line on the above chart) where fans operate at a working voltage of 10 [V] and two filters made of acrylic material are installed: a class F7 on the supply side and a class M6 on the exhaust side. The above “flow/pressure” graphic shows data taken from the supply side.
- Bidirectional (UVB) non-residential ventilation unit (NRVU).
- Heat recovery system: other (air/air).
- Installed drive: continuous 10 V regulation.
- Motorized by-pass facility can be controlled manually and automatically through remote display. The latter is not supported by all remote displays.
- All units are equipped with two temperature sensors, one for inside air and one for outside air.
- All units are equipped with a differential static pressure sensor, which once connected to the unit remote display will show the filters status through an appropriate indicator.
- Additional features and options may be available depending on the selected controller.

Electric motors nominal data

Volt. [V]	Phase [-]	Freq. [Hz]	I_{nom}[1] [A]	Pot_{nom}[1] [W]	V_{nom}[1] [rpm]
230±15%	1~	50/60	2,9	670	1995

(1) Assuming working voltage is 10 V.

Noise levels

SWL[1] [dB] octave band [Hz]								SWL[2]		SPL[3] case	
63	125	250	500	1000	2000	4000	8000	[dB]	[dB(A)]	1m [dB(A)]	3m [dB(A)]
102,4	84,2	88,7	79,6	79,0	78,9	78,6	71,6	102,4	86	60	55

1 = sound power listed by octave band.
2 = total sound power.
3 = sound pressure, measured respectively at 1 [m] and 3 [m] from the unit case.

Flow rate vs thermal efficiency of heat recovery

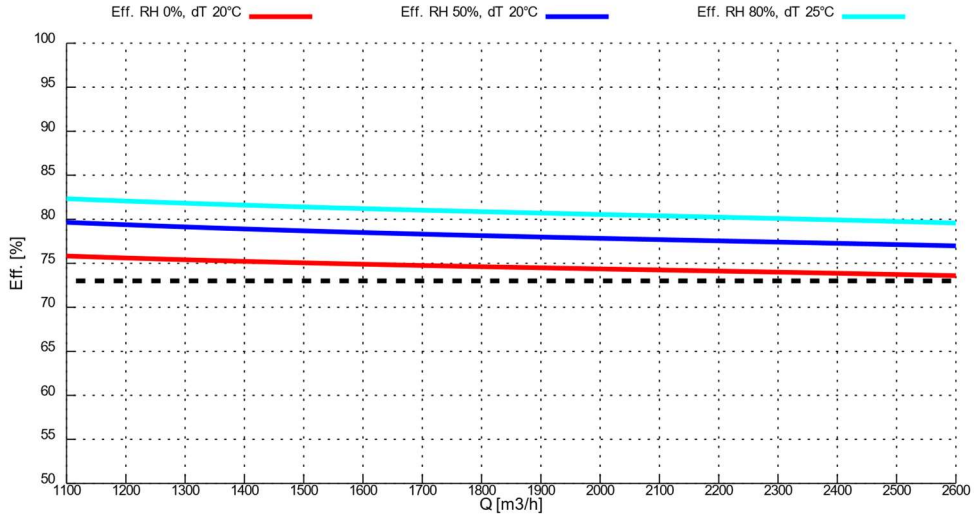

Dimensions [mm] and weight [kg]

A1	A2	B	C	D	øE	F	G	H	L	M	Weight H	Weight V
1200	1200	1105	1260	525	315	275	650	100	1450	610	124,0	135,0

VERTICAL
RCE/V

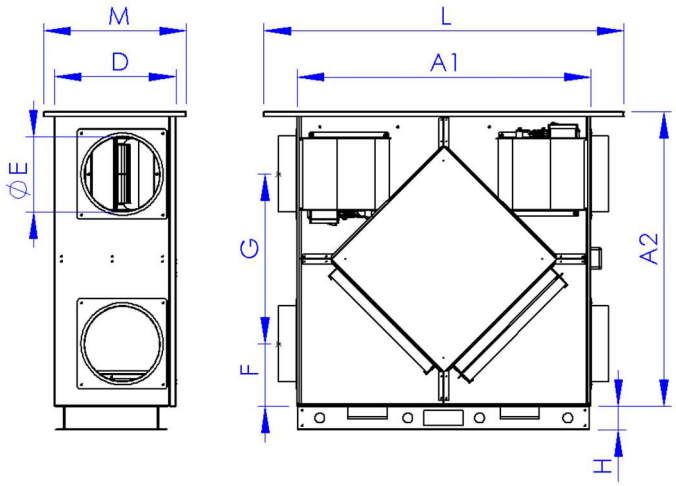

Packaging: L x H x P

HORIZONTAL
RCE/H

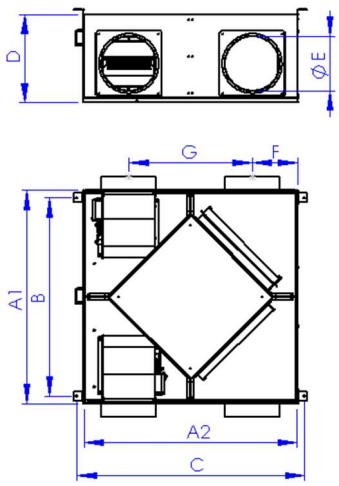

Packaging: L x H x P

Filters dimensions: 625 x 500 x 48 [mm]

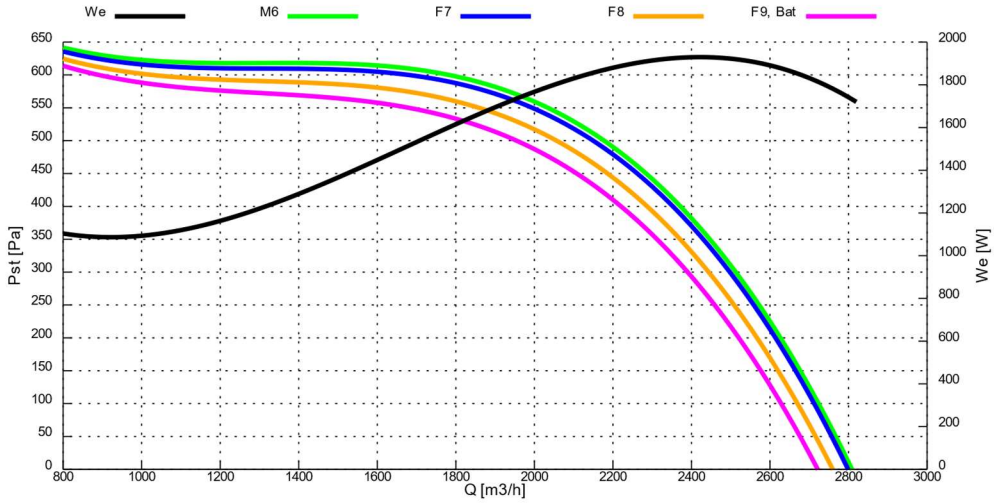

Maximum thermal efficiency of heat recovery: ***84,0*** *[%] (R.H. 80 [%], T_{in} -5 [°C], T_{out} 20 [°C])*

Air flow rate @ 50 [Pa]	2750	[m³/h]	0,764	[m³/s]
Air flow rate @ 150 [Pa]	2660	[m³/h]	0,739	[m³/s]

Nominal data (*Directive 2009/125/CE, regulation n. 1253/2014*)

Nominal flow rate (q_{nom})	[m³/h]	2160
	[m³/s]	0,600
Effective electric power input ($W_{e,eff}$)	[kW]	1862
Internal specific fan power of ventilation components (SFP_{int})	[W/(m³/s)]	1043
Internal specific fan power of ventilation components, 2016 limit	[W/(m³/s)]	1062
Face velocity at design flow rate	[m/s]	1,70
Nominal external pressure ($\Delta p_{s,ext}$)	[Pa]	496
Internal pressure drop of ventilation components ($\Delta p_{s,int}$), supply	[Pa]	256
Internal pressure drop of ventilation components ($\Delta p_{s,int}$), exhaust	[Pa]	261
Thermal efficiency of heat recovery (η_t, dry air ΔT 20 [°C])	*[%]*	74,7
Casing sound power level (L_{WA})	[dB]	68,2
Maximum external leakage rate	max 3,5 @ -400 Pa (EN 13141-7)	
Maximum internal leakage rate	max 5,5 @ +250 Pa (EN 13141-7)	

- Nominal values are referred to a configuration (“*F7*” line on the above chart) where fans operate at a working voltage of 10 [V] and two filters made of acrylic material are installed: a class F7 on the supply side and a class M6 on the exhaust side. The above “flow/pressure” graphic shows data taken from the supply side.
- Bidirectional (UVB) non-residential ventilation unit (NRVU).
- Heat recovery system: other (air/air).
- Installed drive: continuous 10 V regulation.
- Motorized by-pass facility can be controlled manually and automatically through remote display. The latter is not supported by all remote displays.
- All units are equipped with two temperature sensors, one for inside air and one for outside air.
- All units are equipped with a differential static pressure sensor, which once connected to the unit remote display will show the filters status through an appropriate indicator.
- Additional features and options may be available depending on the selected controller.

Electric motors nominal data

Volt. [V]	Phase [-]	Freq. [Hz]	I_{nom}[1] [A]	Pot_{nom}[1] [W]	V_{nom}[1] [rpm]
230±15%	1~	50/60	4,4	1000	1762

(1) Assuming working voltage is 10 V.

Noise levels

SWL[1] [dB] octave band [Hz]								SWL[2]		SPL[3] case	
63	125	250	500	1000	2000	4000	8000	[dB]	[dB(A)]	1m [dB(A)]	3m [dB(A)]
98,3	87,0	91,0	83,5	80,6	80,6	80,9	74,7	98,3	88	61	56

1 = sound power listed by octave band.
2 = total sound power.
3 = sound pressure, measured respectively at 1 [m] and 3 [m] from the unit case.

Flow rate vs thermal efficiency of heat recovery

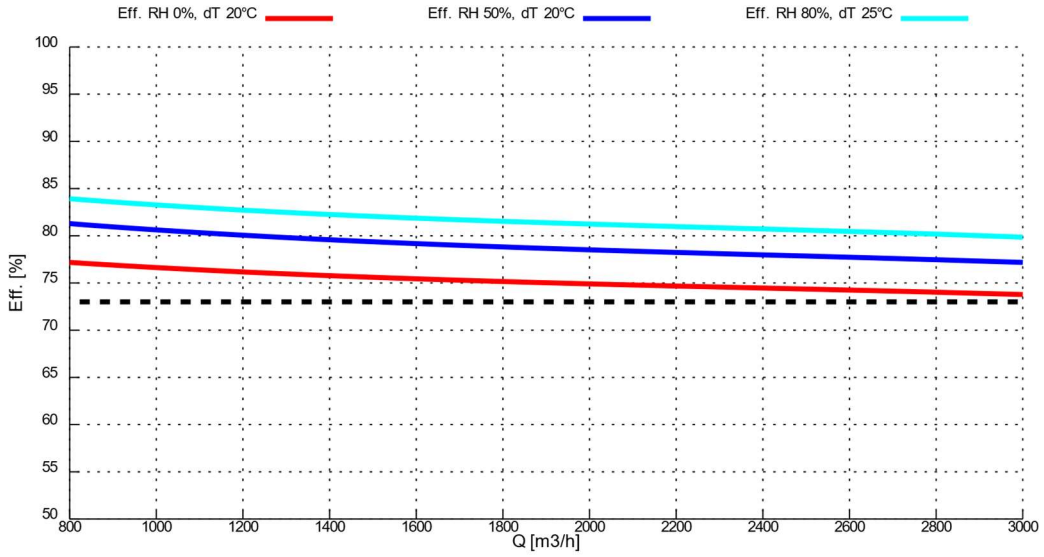

Dimensions [mm] and weight [kg]

A1	A2	B	C	D	øE	F	G	H	L	M	Weight H	Weight V
1350	1350	1255	1410	575	315	300	750	100	1650	670	161,0	167,0

VERTICAL

RCE/V

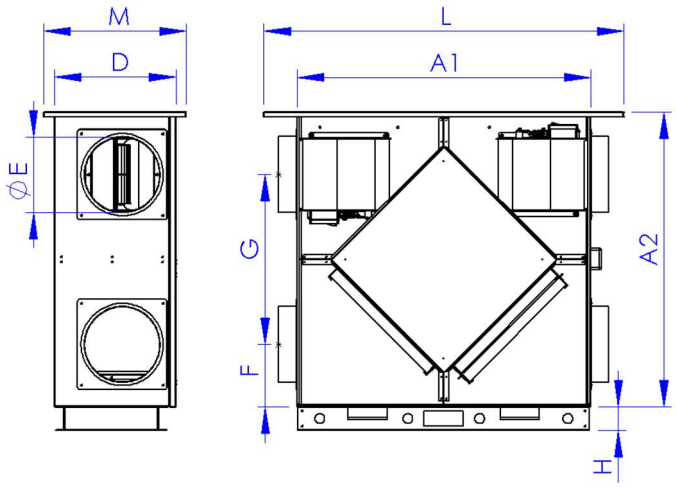

Packaging: L x H x P

HORIZONTAL

RCE/H

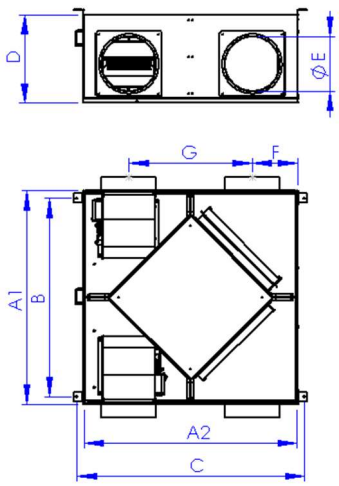

Packaging: L x H x P

Filters dimensions: 625 x 500 x 48 [mm]

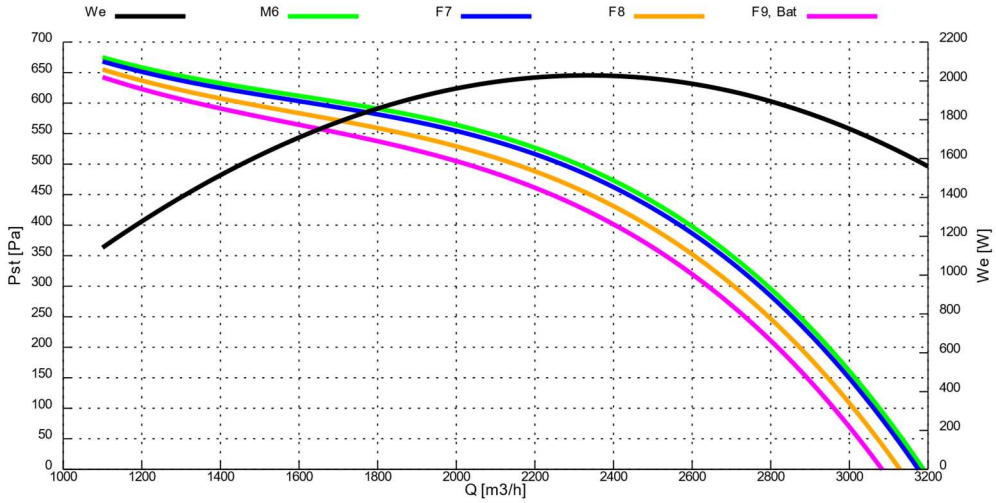

Maximum thermal efficiency of heat recovery: ***84,0*** *[%] (R.H. 80 [%], T_{in} -5 [°C], T_{out} 20 [°C])*

Air flow rate @ 50 [Pa]	3140	[m³/h]	0,872	[m³/s]
Air flow rate @ 150 [Pa]	3000	[m³/h]	0,833	[m³/s]

Nominal data (*Directive 2009/125/CE, regulation n. 1253/2014*)

Nominal flow rate (q_{nom})	[m³/h]	2540
	[m³/s]	0,706
Effective electric power input ($W_{e,eff}$)	[kW]	2003
Internal specific fan power of ventilation components (SFP_{int})	[W/(m³/s)]	1038
Internal specific fan power of ventilation components, 2016 limit	[W/(m³/s)]	1044
Face velocity at design flow rate	[m/s]	1,60
Nominal external pressure ($\Delta p_{s,ext}$)	[Pa]	412
Internal pressure drop of ventilation components ($\Delta p_{s,int}$), supply	[Pa]	243
Internal pressure drop of ventilation components ($\Delta p_{s,int}$), exhaust	[Pa]	247
Thermal efficiency of heat recovery (η_t, dry air ΔT 20 [°C])	*[%]*	74,7
Casing sound power level (L_{WA})	[dB]	68,5
Maximum external leakage rate	max 3,5 @ -400 Pa (EN 13141-7)	
Maximum internal leakage rate	max 5,5 @ +250 Pa (EN 13141-7)	

- Nominal values are referred to a configuration (“*F7*” line on the above chart) where fans operate at a working voltage of 10 [V] and two filters made of acrylic material are installed: a class F7 on the supply side and a class M6 on the exhaust side. The above “flow/pressure” graphic shows data taken from the supply side.
- Bidirectional (UVB) non-residential ventilation unit (NRVU).
- Heat recovery system: other (air/air).
- Installed drive: continuous 10 V regulation.
- Motorized by-pass facility can be controlled manually and automatically through remote display. The latter is not supported by all remote displays.
- All units are equipped with two temperature sensors, one for inside air and one for outside air.
- All units are equipped with a differential static pressure sensor, which once connected to the unit remote display will show the filters status through an appropriate indicator.
- Additional features and options may be available depending on the selected controller.

Electric motors nominal data

Volt. [V]	Phase [-]	Freq. [Hz]	I_{nom}[1] [A]	Pot_{nom}[1] [W]	V_{nom}[1] [rpm]
230±15%	1~	50/60	4,5	1030	1844

(1) Assuming working voltage is 10 V.

Noise levels

SWL[1] [dB] octave band [Hz]								SWL[2]		SPL[3] case	
63	125	250	500	1000	2000	4000	8000	[dB]	[dB(A)]	1m [dB(A)]	3m [dB(A)]
94,1	89,7	93,2	87,4	82,2	82,3	83,2	77,7	94,1	90	62	56

1 = sound power listed by octave band.
2 = total sound power.
3 = sound pressure, measured respectively at 1 [m] and 3 [m] from the unit case.

Flow rate vs thermal efficiency of heat recovery

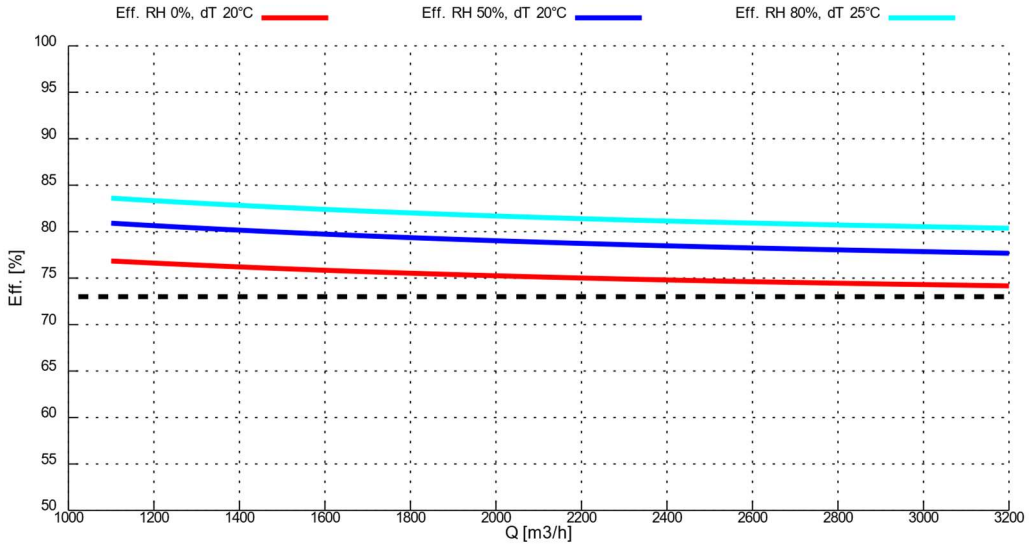

Dimensions [mm] and **weight** [kg]

A1	A2	B	C	D	øE	F	G	H	L	M	Weight H	Weight V
1350	1350	1255	1410	675	315	300	750	100	1650	770	178,0	183,0

VERTICAL

RCE/V

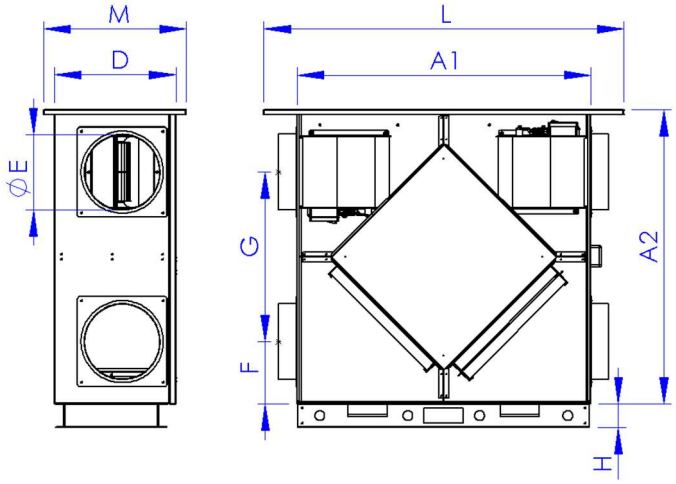

Packaging: L x H x P

HORIZONTAL

RCE/H

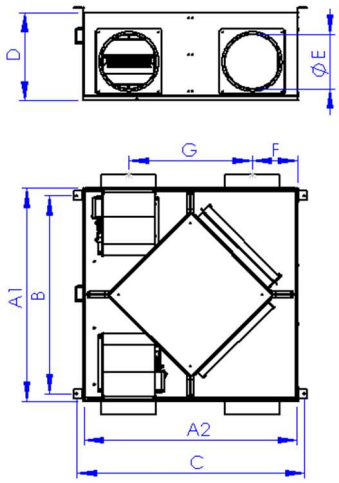

Packaging: L x H x P

Filters dimensions: 625 x 500 x 48 [mm]

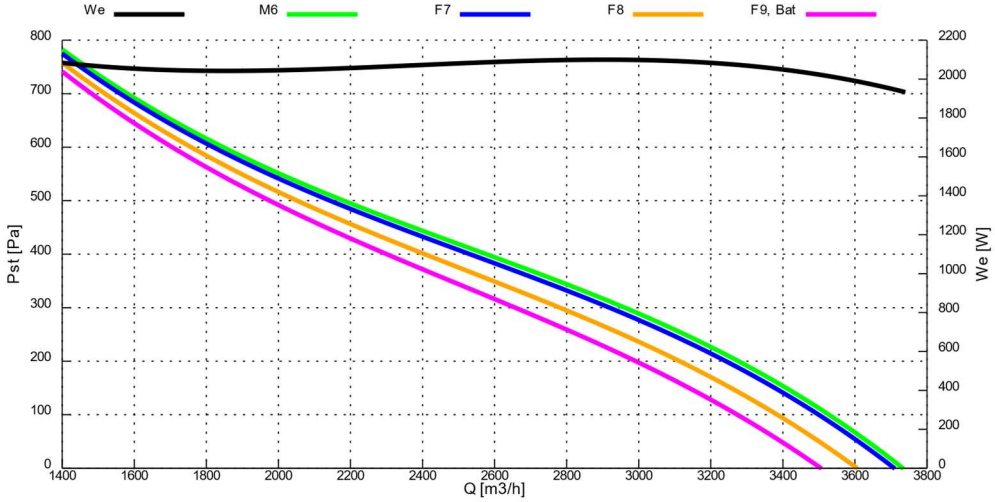

Maximum thermal efficiency of heat recovery: ***83,0*** *[%] (R.H. 80 [%], T_{in} -5 [°C], T_{out} 20 [°C])*

Air flow rate @ 50 [Pa]	3600	[m³/h]	1,000	[m³/s]
Air flow rate @ 150 [Pa]	3360	[m³/h]	0,933	[m³/s]

Nominal data (*Directive 2009/125/CE, regulation n. 1253/2014*)

Nominal flow rate (q_{nom})	[m³/h]	2420
	[m³/s]	0,672
Effective electric power input ($W_{e,eff}$)	[kW]	2,074
Internal specific fan power of ventilation components (SFP_{int})	[W/(m³/s)]	1048
Internal specific fan power of ventilation components, 2016 limit	[W/(m³/s)]	1053
Face velocity at design flow rate	[m/s]	1,60
Nominal external pressure ($\Delta p_{s,ext}$)	[Pa]	428
Internal pressure drop of ventilation components ($\Delta p_{s,int}$), supply	[Pa]	225
Internal pressure drop of ventilation components ($\Delta p_{s,int}$), exhaust	[Pa]	229
Thermal efficiency of heat recovery (η_t, dry air ΔT 20 [°C])	*[%]*	74,8
Casing sound power level (L_{WA})	[dB]	68,5
Maximum external leakage rate	max 3,5 @ -400 Pa (EN 13141-7)	
Maximum internal leakage rate	max 5,5 @ +250 Pa (EN 13141-7)	

- Nominal values are referred to a configuration (“*F7*” line on the above chart) where fans operate at a working voltage of 10 [V] and two filters made of acrylic material are installed: a class F7 on the supply side and a class M6 on the exhaust side. The above “flow/pressure” graphic shows data taken from the supply side.
- Bidirectional (UVB) non-residential ventilation unit (NRVU).
- Heat recovery system: other (air/air).
- Installed drive: continuous 10 V regulation.
- Motorized by-pass facility can be controlled manually and automatically through remote display. The latter is not supported by all remote displays.
- All units are equipped with two temperature sensors, one for inside air and one for outside air.
- All units are equipped with a differential static pressure sensor, which once connected to the unit remote display will show the filters status through an appropriate indicator.
- Additional features and options may be available depending on the selected controller.

Electric motors nominal data

Volt. [V]	Phase [-]	Freq. [Hz]	I_{nom}[1] [A]	Pot_{nom}[1] [W]	V_{nom}[1] [rpm]
230±15%	1~	50/60	4,5	1030	1604

(1) Assuming working voltage is 10 V.

Noise levels

SWL[1] [dB] octave band [Hz]								SWL[2]		SPL[3] case	
63	125	250	500	1000	2000	4000	8000	[dB]	[dB(A)]	1m [dB(A)]	3m [dB(A)]
94,6	90,1	93,9	87,5	82,4	83,3	83,6	78,2	94,5	91	62	56

1 = sound power listed by octave band.
2 = total sound power.
3 = sound pressure, measured respectively at 1 [m] and 3 [m] from the unit case.

Flow rate vs thermal efficiency of heat recovery

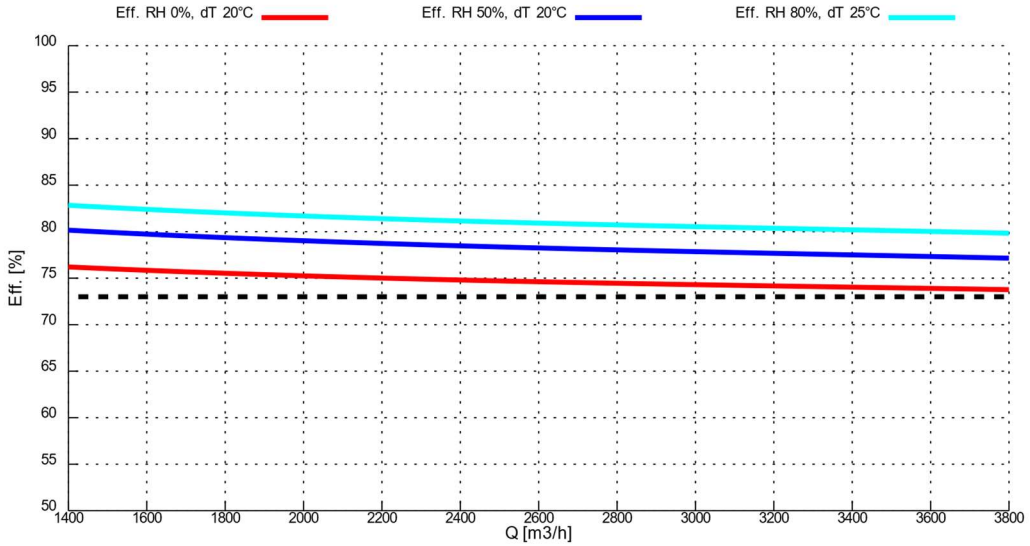

Dimensions [mm] and weight [kg]

A1	A2	B	C	D	øE	F	G	H	L	M	Weight H	Weight V
1350	1350	1255	1410	675	315	300	750	100	1650	770	178,0	183,0

VERTICAL

RCE/V

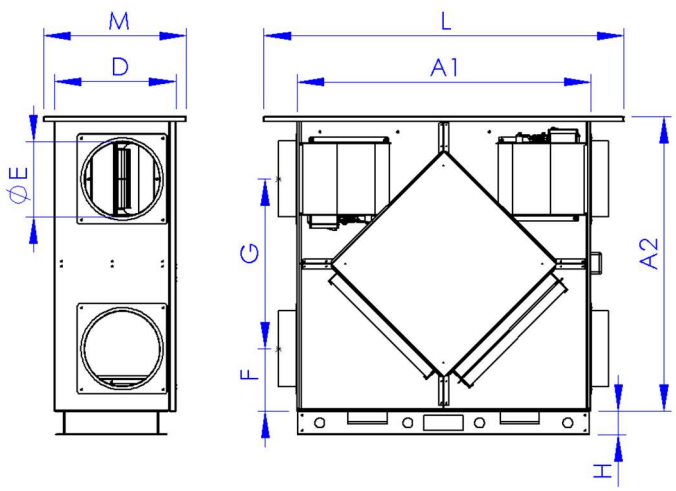

Packaging: L x H x P

HORIZONTAL

RCE/H

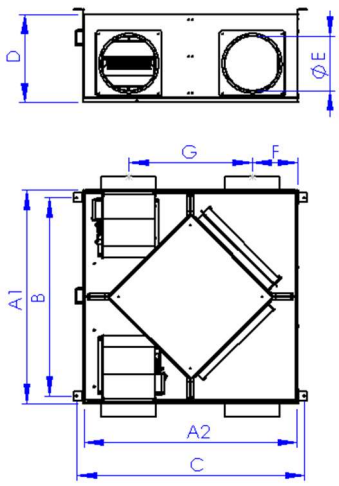

Packaging: L x H x P

Filters dimensions: 625 x 500 x 48 [mm]

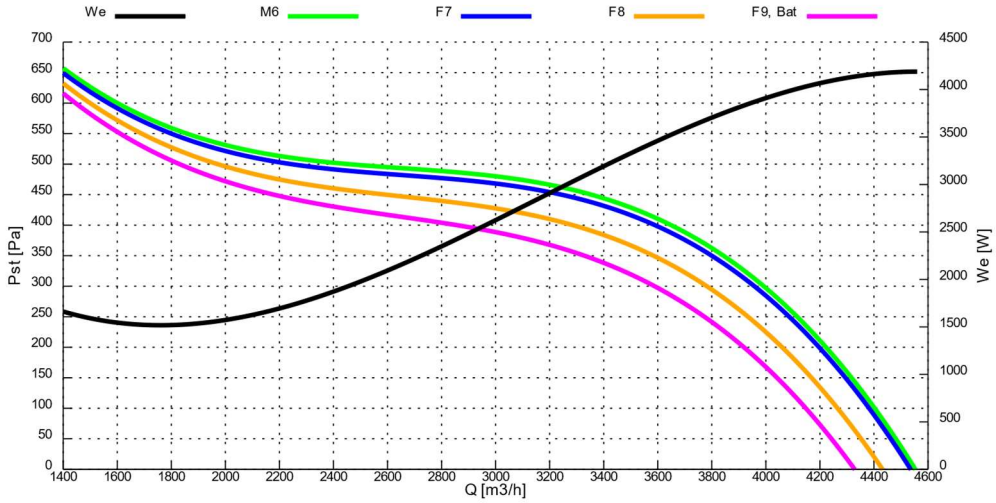

Maximum thermal efficiency of heat recovery: ***83,0*** *[%] (R.H. 80 [%], T_{in} -5 [°C], T_{out} 20 [°C])*

Air flow rate @ 50 [Pa]	3600	[m³/h]	1,000	[m³/s]
Air flow rate @ 150 [Pa]	3360	[m³/h]	0,933	[m³/s]

Nominal data (*Directive 2009/125/CE, regulation n. 1253/2014*)

Nominal flow rate (q_{nom})	[m³/h]	2600
	[m³/s]	0.722
Effective electric power input ($W_{e,eff}$)	[kW]	2.160
Internal specific fan power of ventilation components (SFP_{int})	[W/(m³/s)]	1106
Internal specific fan power of ventilation components, 2016 limit	[W/(m³/s)]	1152
Face velocity at design flow rate	[m/s]	1.5
Nominal external pressure ($\Delta p_{s,ext}$)	[Pa]	455
Internal pressure drop of ventilation components ($\Delta p_{s,int}$), supply	[Pa]	291
Internal pressure drop of ventilation components ($\Delta p_{s,int}$), exhaust	[Pa]	261
Thermal efficiency of heat recovery (η_t, dry air ΔT 20 [°C])	*[%]*	69
Casing sound power level (L_{WA})	[dB]	72,1
Maximum external leakage rate	max 3,5 @ -400 Pa (EN 13141-7)	
Maximum internal leakage rate	max 5,5 @ +250 Pa (EN 13141-7)	

- Nominal values are referred to a configuration (“*F7*” line on the above chart) where fans operate at a working voltage of 10 [V] and two filters made of acrylic material are installed: a class F7 on the supply side and a class M6 on the exhaust side. The above “flow/pressure” graphic shows data taken from the supply side.
- Bidirectional (UVB) non-residential ventilation unit (NRVU).
- Heat recovery system: other (air/air).
- Installed drive: continuous 10 V regulation.
- Motorized by-pass facility can be controlled manually and automatically through remote display. The latter is not supported by all remote displays.
- All units are equipped with two temperature sensors, one for inside air and one for outside air.
- All units are equipped with a differential static pressure sensor, which once connected to the unit remote display will show the filters status through an appropriate indicator.
- Additional features and options may be available depending on the selected controller.

Electric motors nominal data

Volt. [V]	Phase [-]	Freq. [Hz]	I_{nom}[1] [A]	Pot_{nom}[1] [W]	V_{nom}[1] [rpm]
230±15%	1~	50/60	5,6	1290	1979

(1) Assuming working voltage is 10 V.

Noise levels

SWL[1] [dB] octave band [Hz]								SWL[2]		SPL[3] case	
63	125	250	500	1000	2000	4000	8000	[dB]	[dB(A)]	1m [dB(A)]	3m [dB(A)]
100,0	90,1	94,0	87,0	83,5	83,7	83,7	78,6	100,0	91	63	57

1 = sound power listed by octave band.
2 = total sound power.
3 = sound pressure, measured respectively at 1 [m] and 3 [m] from the unit case.

Flow rate vs thermal efficiency of heat recovery

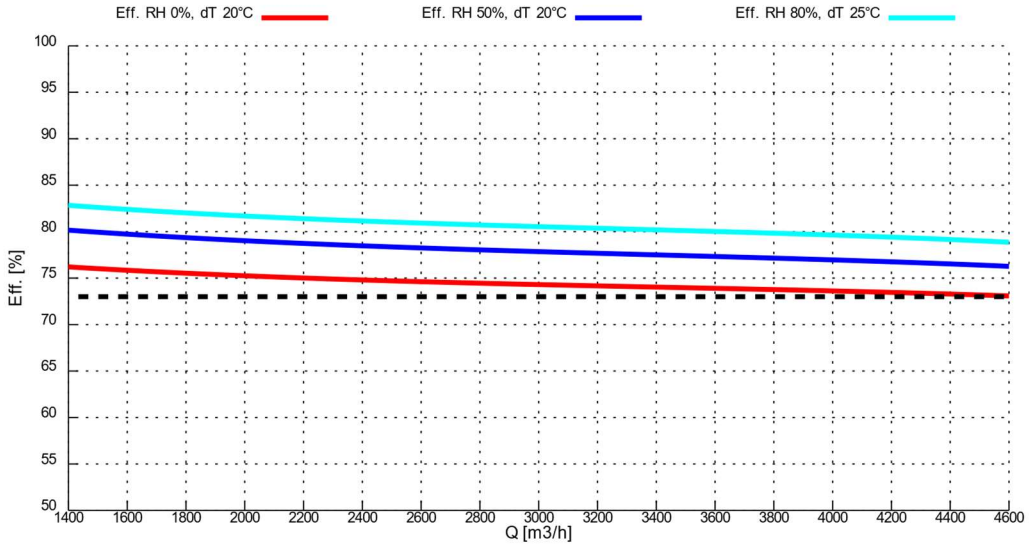

Dimensions [mm] and weight [kg]

A1	A2	B	C	D	øE	F	G	H	L	M	Weight H	Weight V
1350	1350	1255	1410	775	350	300	750	100	1550	850	215,0	245,0

VERTICAL

RCE/V

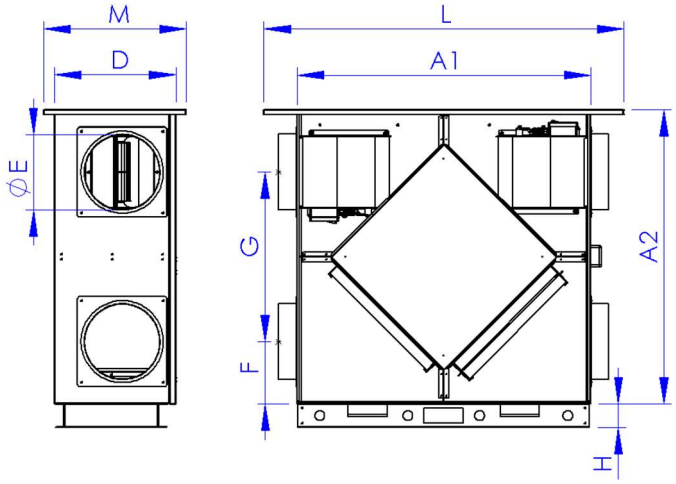

Packaging: L x H x P

HORIZONTAL

RCE/H

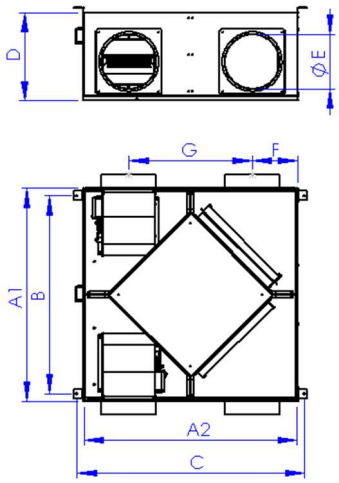

Packaging: L x H x P

Filters dimensions: 625 x 700 x 48 [mm]

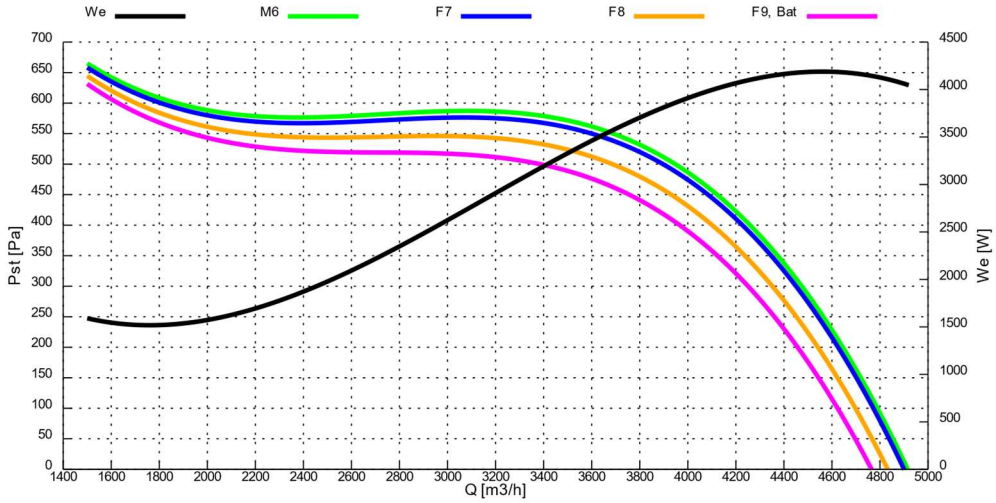

Maximum thermal efficiency of heat recovery: ***84,0*** *[%] (R.H. 80 [%], T_{in} -5 [°C], T_{out} 20 [°C])*

Air flow rate @ 50 [Pa]	4840	[m³/h]	1,344	[m³/s]
Air flow rate @ 150 [Pa]	4700	[m³/h]	1,306	[m³/s]

Nominal data (*Directive 2009/125/CE, regulation n. 1253/2014*)

Nominal flow rate (q_{nom})	[m³/h]	3360
	[m³/s]	0,933
Effective electric power input ($W_{e,eff}$)	[kW]	3136
Internal specific fan power of ventilation components (SFP_{int})	[W/(m³/s)]	1014
Internal specific fan power of ventilation components, 2016 limit	[W/(m³/s)]	1017
Face velocity at design flow rate	[m/s]	1,70
Nominal external pressure ($\Delta p_{s,ext}$)	[Pa]	570
Internal pressure drop of ventilation components ($\Delta p_{s,int}$), supply	[Pa]	251
Internal pressure drop of ventilation components ($\Delta p_{s,int}$), exhaust	[Pa]	256
Thermal efficiency of heat recovery (η_t, dry air ΔT 20 [°C])	*[%]*	74,9
Casing sound power level (L_{WA})	[dB]	72,1
Maximum external leakage rate	max 3,5 @ -400 Pa (EN 13141-7)	
Maximum internal leakage rate	max 5,5 @ +250 Pa (EN 13141-7)	

- Nominal values are referred to a configuration (“*F7*” line on the above chart) where fans operate at a working voltage of 10 [V] and two filters made of acrylic material are installed: a class F7 on the supply side and a class M6 on the exhaust side. The above “flow/pressure” graphic shows data taken from the supply side.
- Bidirectional (UVB) non-residential ventilation unit (NRVU).
- Heat recovery system: other (air/air).
- Installed drive: continuous 10 V regulation.
- Motorized by-pass facility can be controlled manually and automatically through remote display. The latter is not supported by all remote displays.
- All units are equipped with two temperature sensors, one for inside air and one for outside air.
- All units are equipped with a differential static pressure sensor, which once connected to the unit remote display will show the filters status through an appropriate indicator.
- Additional features and options may be available depending on the selected controller.

Electric motors nominal data

Volt. [V]	Phase [-]	Freq. [Hz]	I_{nom}[1] [A]	Pot_{nom}[1] [W]	V_{nom}[1] [rpm]
230±15%	1~	50/60	7,8	1,82	2009

(1) Assuming working voltage is 10 V.

Noise levels

SWL[1] [dB] octave band [Hz]								SWL[2]		SPL[3] case	
63	125	250	500	1000	2000	4000	8000	[dB]	[dB(A)]	1m [dB(A)]	3m [dB(A)]
106,0	90,4	94,7	86,5	84,7	85,0	84,2	79,5	106,0	91	63	58

1 = sound power listed by octave band.
2 = total sound power.
3 = sound pressure, measured respectively at 1 [m] and 3 [m] from the unit case.

Flow rate vs thermal efficiency of heat recovery

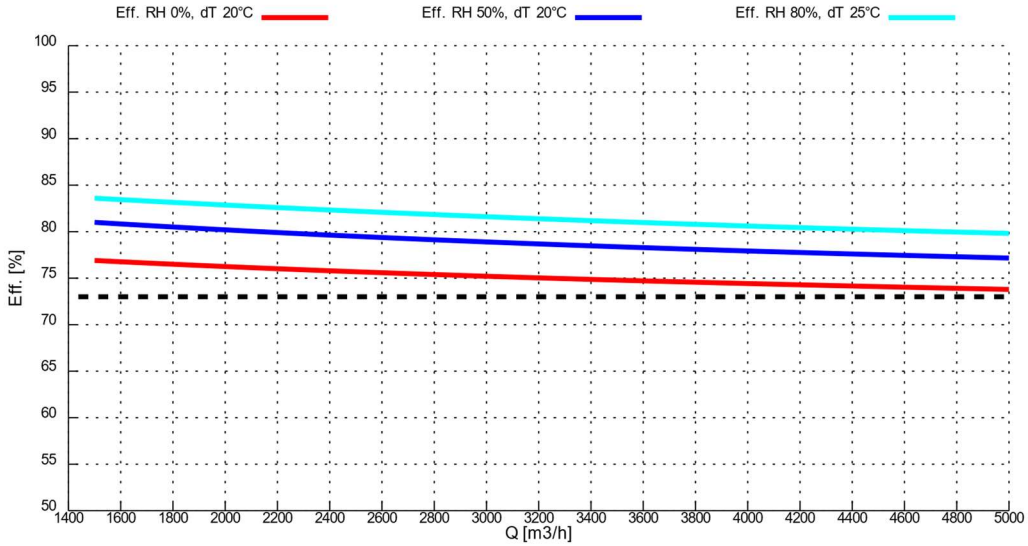

Dimensions [mm] and weight [kg]

A1	A2	B	C	D	øE	F	G	H	L	M	Weight H	Weight V
1650	1650	1080	1710	775	350	285	1080	100	1900	850	215,0	245,0

VERTICAL

RCE/V

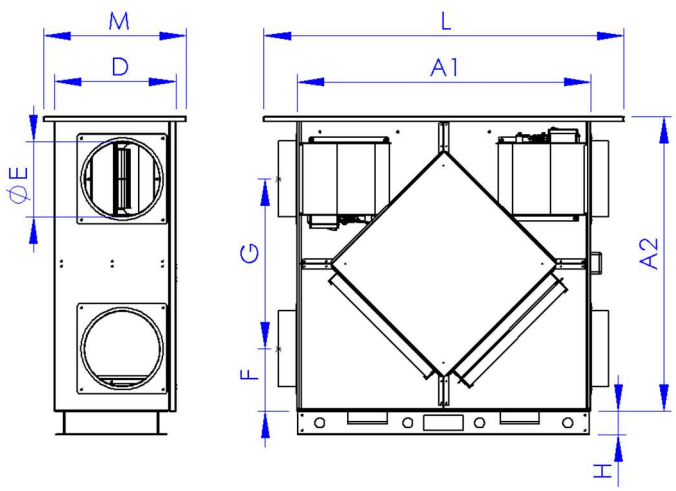

Packaging: L x H x P

HORIZONTAL

RCE/H

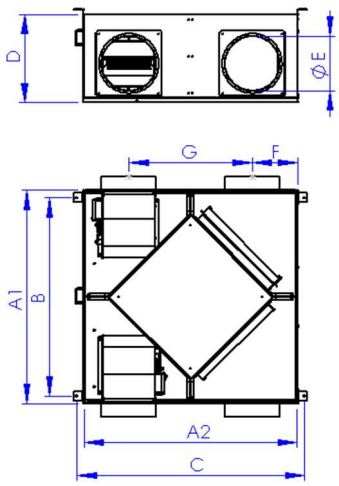

Packaging: L x H x P

Filters dimensions: 625 x 700 x 48 [mm]

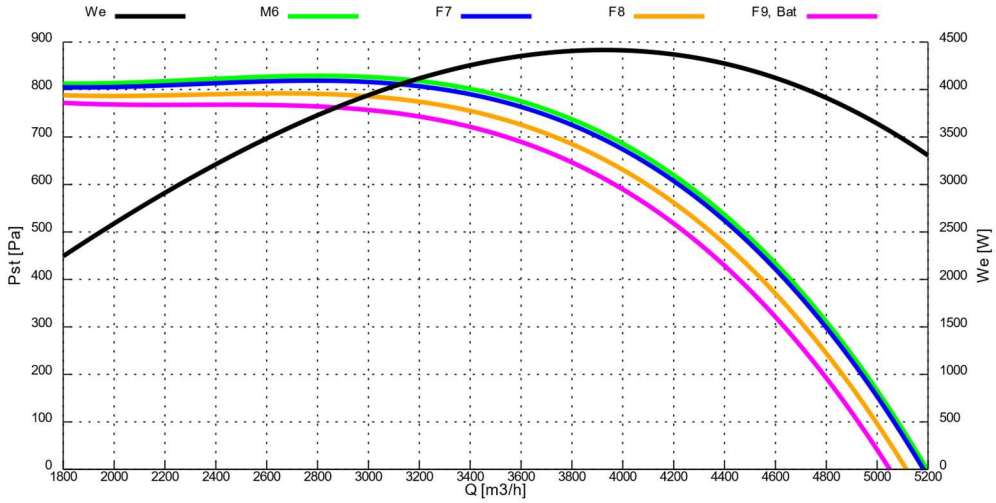

Maximum thermal efficiency of heat recovery: ***84,0*** *[%] (R.H. 80 [%], T_{in} -5 [°C], T_{out} 20 [°C])*

Air flow rate @ 50 [Pa]	5100	[m³/h]	1,417	[m³/s]
Air flow rate @ 150 [Pa]	5000	[m³/h]	1,389	[m³/s]

Nominal data (*Directive 2009/125/CE, regulation n. 1253/2014*)

Nominal flow rate (q_{nom})	[m³/h]	3200
	[m³/s]	0,889
Effective electric power input ($W_{e,eff}$)	[kW]	4118
Internal specific fan power of ventilation components (SFP_{int})	[W/(m³/s)]	1019
Internal specific fan power of ventilation components, 2016 limit	[W/(m³/s)]	1028
Face velocity at design flow rate	[m/s]	1,60
Nominal external pressure ($\Delta p_{s,ext}$)	[Pa]	807
Internal pressure drop of ventilation components ($\Delta p_{s,int}$), supply	[Pa]	232
Internal pressure drop of ventilation components ($\Delta p_{s,int}$), exhaust	[Pa]	237
Thermal efficiency of heat recovery (η_t, dry air ΔT 20 [°C])	*[%]*	75,0
Casing sound power level (L_{WA})	[dB]	71,8
Maximum external leakage rate	max 3,5 @ -400 Pa (EN 13141-7)	
Maximum internal leakage rate	max 5,5 @ +250 Pa (EN 13141-7)	

- Nominal values are referred to a configuration (“*F7*” line on the above chart) where fans operate at a working voltage of 10 [V] and two filters made of acrylic material are installed: a class F7 on the supply side and a class M6 on the exhaust side. The above “flow/pressure” graphic shows data taken from the supply side.
- Bidirectional (UVB) non-residential ventilation unit (NRVU).
- Heat recovery system: other (air/air).
- Installed drive: continuous 10 V regulation.
- Motorized by-pass facility can be controlled manually and automatically through remote display. The latter is not supported by all remote displays.
- All units are equipped with two temperature sensors, one for inside air and one for outside air.
- All units are equipped with a differential static pressure sensor, which once connected to the unit remote display will show the filters status through an appropriate indicator.
- Additional features and options may be available depending on the selected controller.

Electric motors nominal data

Volt. [V]	Phase [-]	Freq. [Hz]	I_{nom}[1] [A]	Pot_{nom}[1] [W]	V_{nom}[1] [rpm]
230±15%	1~	50/60	8.6	2000	1613

(1) Assuming working voltage is 10 V.

Noise levels

SWL[1] [dB] octave band [Hz]								SWL[2]		SPL[3] case	
63	125	250	500	1000	2000	4000	8000	[dB]	[dB(A)]	1m [dB(A)]	3m [dB(A)]
111,9	90,8	95,5	86,1	86,0	86,4	84,7	80,4	111,9	92	64	59

1 = sound power listed by octave band.
2 = total sound power.
3 = sound pressure, measured respectively at 1 [m] and 3 [m] from the unit case.

Flow rate vs thermal efficiency of heat recovery

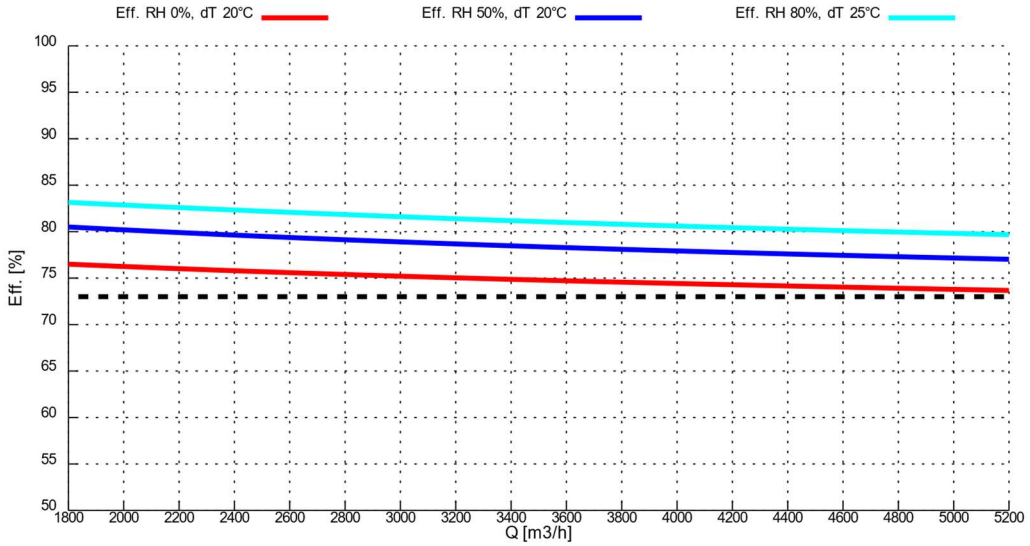

Dimensions [mm] and **weight** [kg]

A1	A2	B	C	D	øE	F	G	H	L	M	Weight H	Weight V
1650	1650	1080	1710	775	350	285	1080	100	1900	850	302,0	320,0

VERTICAL

RCE/V

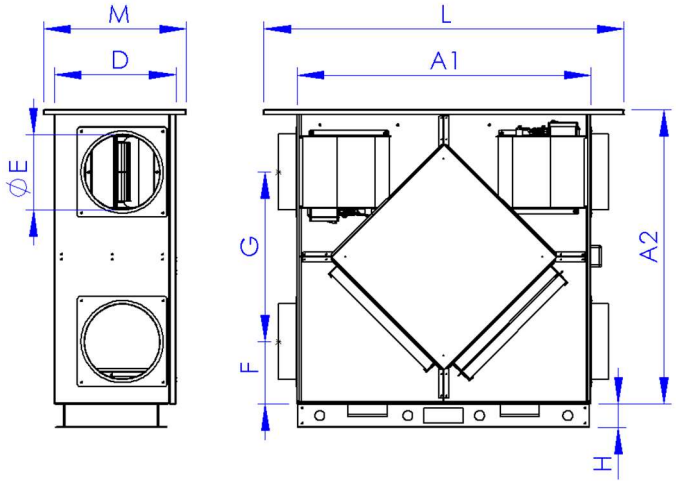

Packaging: L x H x P

HORIZONTAL

RCE/H

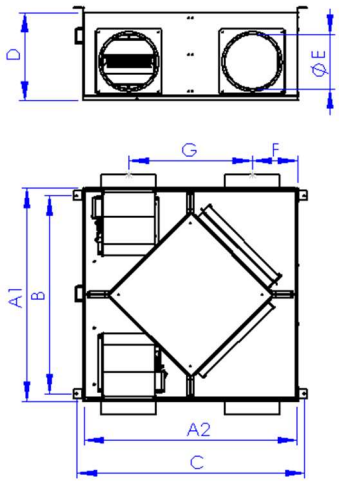

Packaging: L x H x P

Filters dimensions: 625 x 700 x 48 [mm]

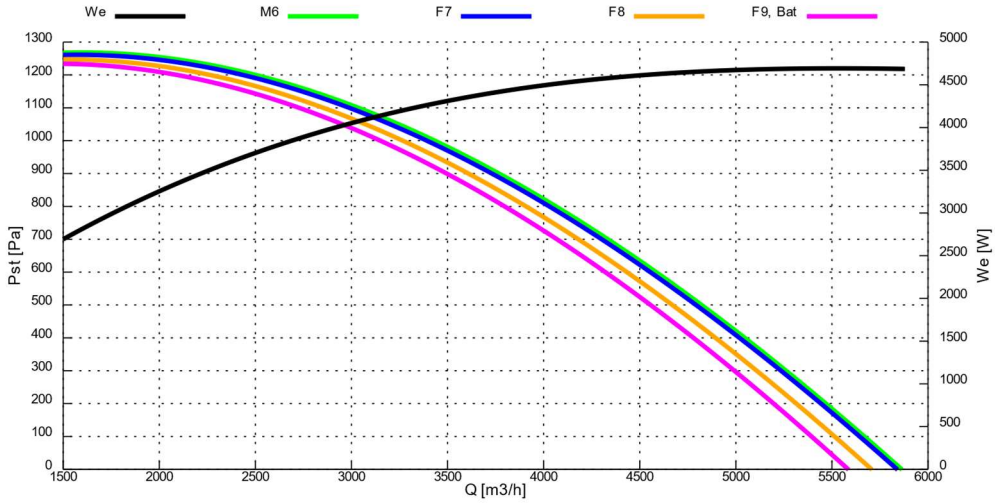

Maximum thermal efficiency of heat recovery: ***84,0*** *[%] (R.H. 80 [%], T_{in} -5 [°C], T_{out} 20 [°C])*

Air flow rate @ 50 [Pa]	5750	[m³/h]	1,597	[m³/s]
Air flow rate @ 150 [Pa]	5580	[m³/h]	1,550	[m³/s]

Nominal data (*Directive 2009/125/CE, regulation n. 1253/2014*)

Nominal flow rate (q_{nom})	[m³/h]	3620
	[m³/s]	1,006
Effective electric power input ($W_{e,eff}$)	[kW]	4362
Internal specific fan power of ventilation components (SFP_{int})	[W/(m³/s)]	998
Internal specific fan power of ventilation components, 2016 limit	[W/(m³/s)]	1000
Face velocity at design flow rate	[m/s]	1,80
Nominal external pressure ($\Delta p_{s,ext}$)	[Pa]	934
Internal pressure drop of ventilation components ($\Delta p_{s,int}$), supply	[Pa]	283
Internal pressure drop of ventilation components ($\Delta p_{s,int}$), exhaust	[Pa]	289
Thermal efficiency of heat recovery (η_t, dry air ΔT 20 [°C])	*[%]*	74,7
Casing sound power level (L_{WA})	[dB]	68
Maximum external leakage rate	max 3,5 @ -400 Pa (EN 13141-7)	
Maximum internal leakage rate	max 5,5 @ +250 Pa (EN 13141-7)	

- Nominal values are referred to a configuration (“*F7*” line on the above chart) where fans operate at a working voltage of 10 [V] and two filters made of acrylic material are installed: a class F7 on the supply side and a class M6 on the exhaust side. The above “flow/pressure” graphic shows data taken from the supply side.
- Bidirectional (UVB) non-residential ventilation unit (NRVU).
- Heat recovery system: other (air/air).
- Installed drive: continuous 10 V regulation.
- Motorized by-pass facility can be controlled manually and automatically through remote display. The latter is not supported by all remote displays.
- All units are equipped with two temperature sensors, one for inside air and one for outside air.
- All units are equipped with a differential static pressure sensor, which once connected to the unit remote display will show the filters status through an appropriate indicator.
- Additional features and options may be available depending on the selected controller.

Electric motors nominal data

Volt. [V]	Phase [-]	Freq. [Hz]	I_{nom}[1] [A]	Pot_{nom}[1] [W]	V_{nom}[1] [rpm]
230±15%	1~	50/60	9,4	2210	3178

(1) Assuming working voltage is 10 V.

Noise levels

SWL[1] [dB] octave band [Hz]								SWL[2]		SPL[3] case	
63	125	250	500	1000	2000	4000	8000	[dB]	[dB(A)]	1m [dB(A)]	3m [dB(A)]
115,8	96,1	100,9	90,6	90,7	89,9	89,0	84,1	115,3	93	63	61

1 = sound power listed by octave band.
2 = total sound power.
3 = sound pressure, measured respectively at 1 [m] and 3 [m] from the unit case.

Flow rate vs thermal efficiency of heat recovery

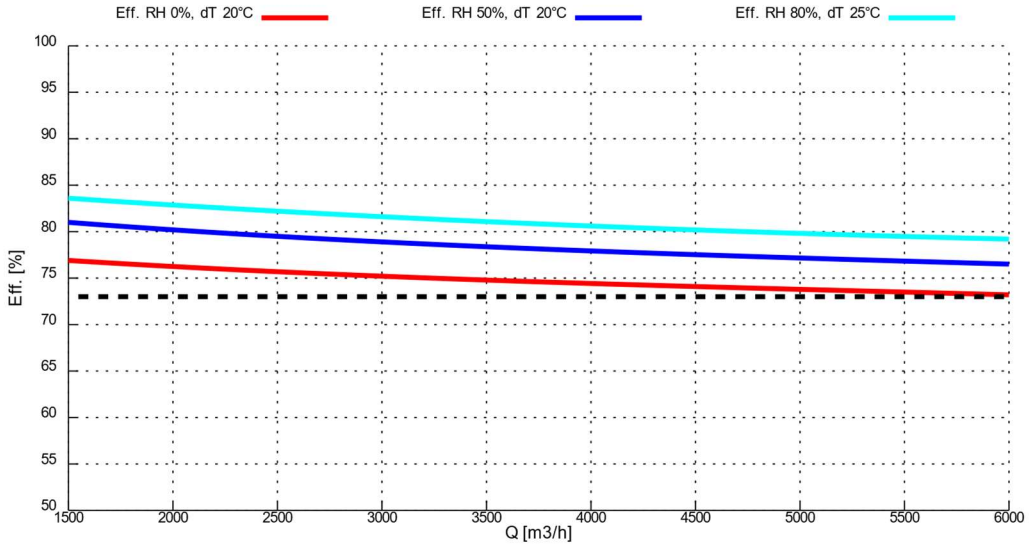

Dimensions [mm] and **weight** [kg]

A1	A2	B	C	D	øE	F	G	H	L	M	Weight H	Weight V
1650	1650	1080	1710	775	350	285	1080	100	1900	850	302,0	320,0

VERTICAL

RCE/V

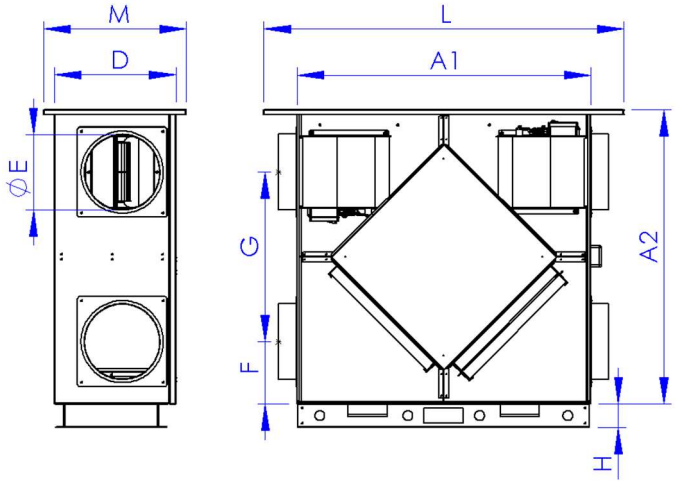

Packaging: L x H x P

HORIZONTAL

RCE/H

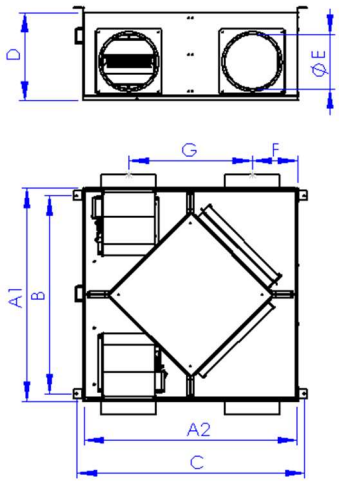

Packaging: L x H x P

Filters dimensions: 625 x 700 x 48 [mm]

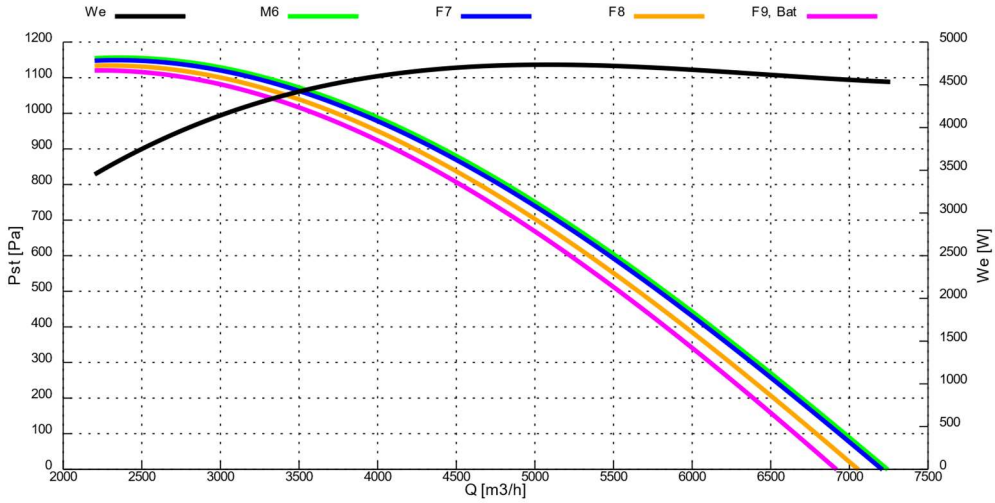

Maximum thermal efficiency of heat recovery: ***84,0*** *[%] (R.H. 80 [%], T_{in} -5 [°C], T_{out} 20 [°C])*

Air flow rate @ 50 [Pa]	7100	[m³/h]	1,972	[m³/s]
Air flow rate @ 150 [Pa]	6750	[m³/h]	1,875	[m³/s]

Nominal data (*Directive 2009/125/CE, regulation n. 1253/2014*)

Nominal flow rate (q_{nom})	[m³/h]	5140
	[m³/s]	1,428
Effective electric power input ($W_{e,eff}$)	[kW]	4735
Internal specific fan power of ventilation components (SFP_{int})	[W/(m³/s)]	935
Internal specific fan power of ventilation components, 2016 limit	[W/(m³/s)]	937
Face velocity at design flow rate	[m/s]	1,80
Nominal external pressure ($\Delta p_{s,ext}$)	[Pa]	700
Internal pressure drop of ventilation components ($\Delta p_{s,int}$), supply	[Pa]	279
Internal pressure drop of ventilation components ($\Delta p_{s,int}$), exhaust	[Pa]	285
Thermal efficiency of heat recovery (η_t, dry air ΔT 20 [°C])	*[%]*	74,7
Casing sound power level (L_{WA})	[dB]	75,3
Maximum external leakage rate	max 3,5 @ -400 Pa (EN 13141-7)	
Maximum internal leakage rate	max 5,5 @ +250 Pa (EN 13141-7)	

- Nominal values are referred to a configuration (“*F7*” line on the above chart) where fans operate at a working voltage of 10 [V] and two filters made of acrylic material are installed: a class F7 on the supply side and a class M6 on the exhaust side. The above “flow/pressure” graphic shows data taken from the supply side.
- Bidirectional (UVB) non-residential ventilation unit (NRVU).
- Heat recovery system: other (air/air).
- Installed drive: continuous 10 V regulation.
- Motorized by-pass facility can be controlled manually and automatically through remote display. The latter is not supported by all remote displays.
- All units are equipped with two temperature sensors, one for inside air and one for outside air.
- All units are equipped with a differential static pressure sensor, which once connected to the unit remote display will show the filters status through an appropriate indicator.
- Additional features and options may be available depending on the selected controller.

Electric motors nominal data

Volt. [V]	Phase [-]	Freq. [Hz]	I_{nom}[1] [A]	Pot_{nom}[1] [W]	V_{nom}[1] [rpm]
230±15%	1~	50/60	9,3	2,230	2087

(1) Assuming working voltage is 10 V.

Noise levels

SWL[1] [dB] octave band [Hz]								SWL[2]		SPL[3] case	
63	125	250	500	1000	2000	4000	8000	[dB]	[dB(A)]	1m [dB(A)]	3m [dB(A)]
116,2	96,7	101,6	91,3	91,9	90,8	89,5	85,2	116,1	94	65	62

1 = sound power listed by octave band.
2 = total sound power.
3 = sound pressure, measured respectively at 1 [m] and 3 [m] from the unit case.

Flow rate vs thermal efficiency of heat recovery

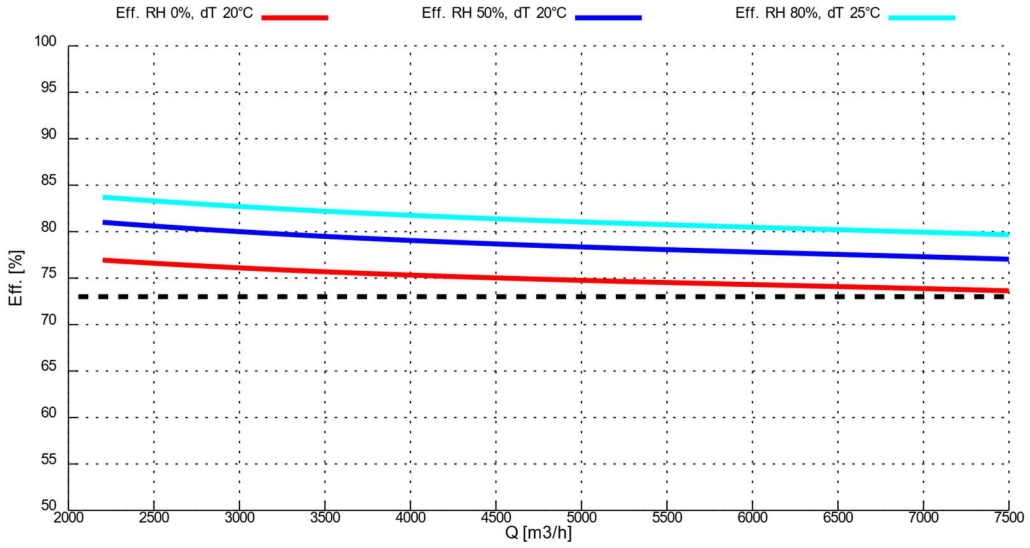

Dimensions [mm] and **weight** [kg]

A1	A2	B	C	D	øE	F	G	H	L	M	Weight H	Weight V
2150	2150	--	2210	1075	600	425	1300	100	2200	1130	500,0	550,0

VERTICAL

RCE/V

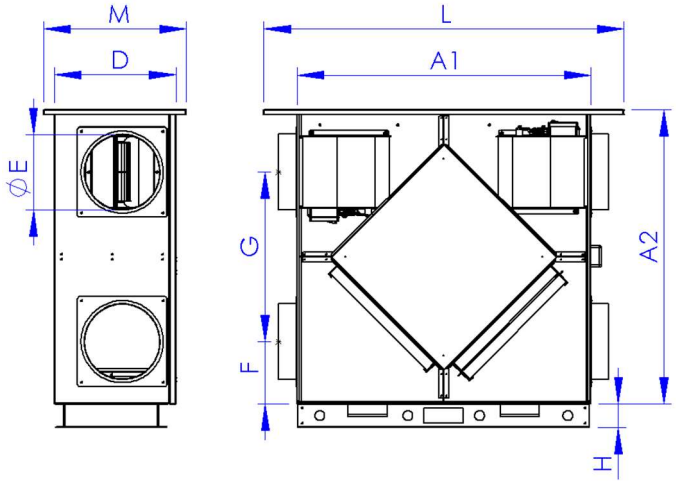

Packaging: L x H x P

HORIZONTAL

RCE/H

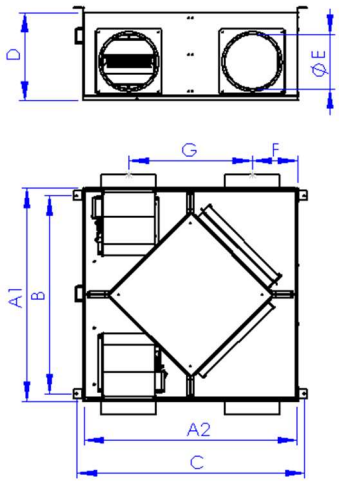

Packaging: L x H x P

Filters dimensions: 625 x 700 x 48 [mm]

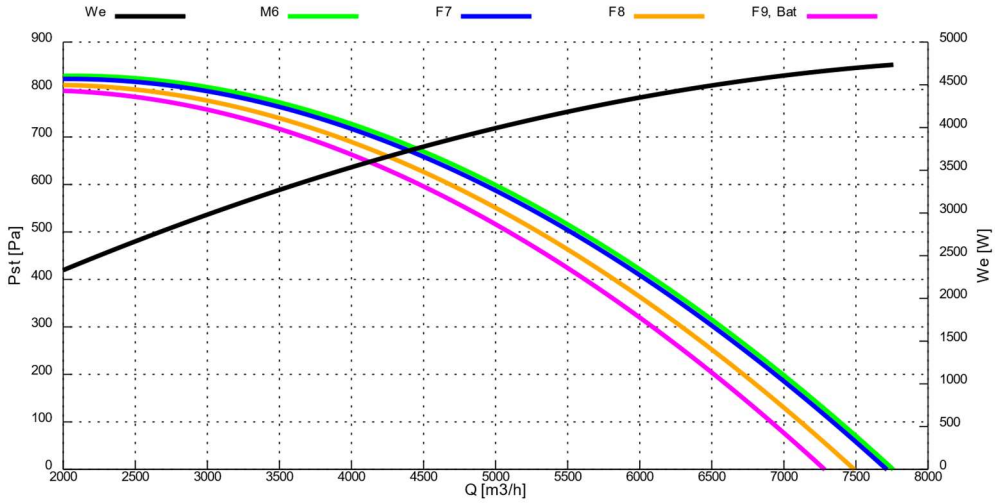

Maximum thermal efficiency of heat recovery: ***84,0*** *[%] (R.H. 80 [%], T_{in} -5 [°C], T_{out} 20 [°C])*

Air flow rate @ 50 [Pa]	7500	[m³/h]	2,083	[m³/s]
Air flow rate @ 150 [Pa]	7150	[m³/h]	1,986	[m³/s]

Nominal data (*Directive 2009/125/CE, regulation n. 1253/2014*)

Nominal flow rate (q_{nom})	[m³/h]	5160
	[m³/s]	1,433
Effective electric power input ($W_{e,eff}$)	[kW]	4057
Internal specific fan power of ventilation components (SFP_{int})	[W/(m³/s)]	933
Internal specific fan power of ventilation components, 2016 limit	[W/(m³/s)]	935
Face velocity at design flow rate	[m/s]	1,80
Nominal external pressure ($\Delta p_{s,ext}$)	[Pa]	562
Internal pressure drop of ventilation components ($\Delta p_{s,int}$), supply	[Pa]	281
Internal pressure drop of ventilation components ($\Delta p_{s,int}$), exhaust	[Pa]	286
Thermal efficiency of heat recovery (η_t, dry air ΔT 20 [°C])	*[%]*	74,7
Casing sound power level (L_{WA})	[dB]	79,3
Maximum external leakage rate	max 3,5 @ -400 Pa (EN 13141-7)	
Maximum internal leakage rate	max 5,5 @ +250 Pa (EN 13141-7)	

- Nominal values are referred to a configuration (“*F7*” line on the above chart) where fans operate at a working voltage of 10 [V] and two filters made of acrylic material are installed: a class F7 on the supply side and a class M6 on the exhaust side. The above “flow/pressure” graphic shows data taken from the supply side.
- Bidirectional (UVB) non-residential ventilation unit (NRVU).
- Heat recovery system: other (air/air).
- Installed drive: continuous 10 V regulation.
- Motorized by-pass facility can be controlled manually and automatically through remote display. The latter is not supported by all remote displays.
- All units are equipped with two temperature sensors, one for inside air and one for outside air.
- All units are equipped with a differential static pressure sensor, which once connected to the unit remote display will show the filters status through an appropriate indicator.
- Additional features and options may be available depending on the selected controller.

Electric motors nominal data

Volt. [V]	Phase [-]	Freq. [Hz]	I_{nom}[1] [A]	Pot_{nom}[1] [W]	V_{nom}[1] [rpm]
230±15%	1~	50/60	9,8	2,350	2620

(1) Assuming working voltage is 10 V.

Noise levels

SWL[1] [dB] octave band [Hz]								SWL[2]		SPL[3] case	
63	125	250	500	1000	2000	4000	8000	[dB]	[dB(A)]	1m [dB(A)]	3m [dB(A)]
11,9	97,0	101,6	91,6	92,1	90,6	89,5	85,3	116,4	93	66	63

1 = sound power listed by octave band.
2 = total sound power.
3 = sound pressure, measured respectively at 1 [m] and 3 [m] from the unit case.

Flow rate vs thermal efficiency of heat recovery

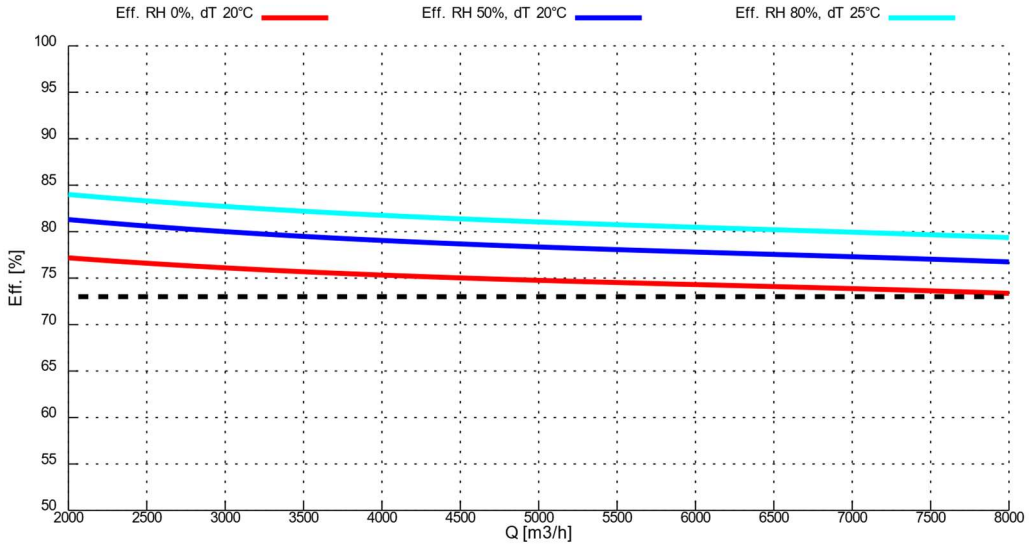

Dimensions [mm] and weight [kg]

A1	A2	B	C	D	øE	F	G	H	L	M	Weight H	Weight V
2150	2150	--	2210	1075	600	425	1300	100	2200	1130	500,0	550,0

VERTICAL
RCE/V

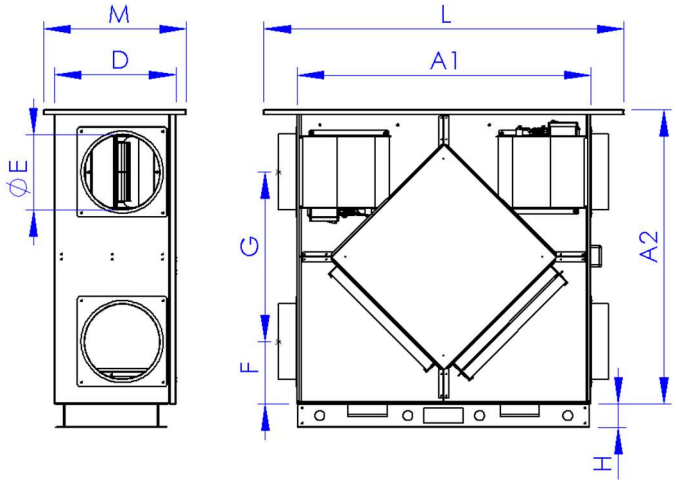

Packaging: L x H x P

HORIZONTAL
RCE/H

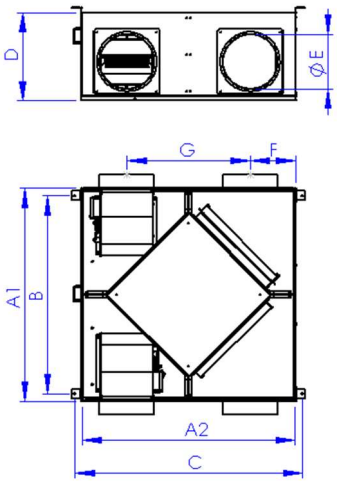

Packaging: L x H x P

Filters dimensions: 625 x 700 x 48 [mm]

Accessories

Hot/cool air-water heat exchanger.

Electric heater with circular connections.

External filter box with inspection. Available with either plane cells and rigid bag filters.

Outlet truncated duct.

Electric heater (V230/50 Hz) with thermostat and galvanized steel sheet frame.

Weathering cover.

EXTERNAL HEAT EXCHANGERS, "BAT-2R-AC" SERIES

Boxed air/water heat exchangers for air heating, enclosed in a casing made of galvanized steel sheets, with both inlet and outlet circular connections. All heat exchangers are sized according to the following data:

- Inlet/outlet water temperature: 70/60 [°C];
- Inlet/outlet air temperature: 10/30 [°C].

Can be supplied with cold water to achieve cooling instead of heating (BAT-2R-AF).

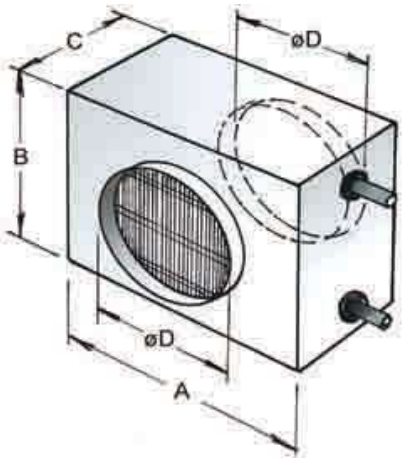

Taglia	Air [m³/h]	H_2O [m³/h]	A	B	C	Ø D	Ø conn.
700	600	0,4	410	350	300	Ø 150	Ø ¾"
1000	1000	0,6	620	350	300	Ø 150	Ø ¾"
1300	1300	0,8	620	350	300	Ø 250	Ø ¾"
1600	1600	1,0	620	350	300	Ø 250	Ø ¾"
2500	2400	1,5	670	410	300	Ø 315	Ø ¾"
2800	2700	1,6	670	410	300	Ø 315	Ø ¾"
3100	3100	1,9	790	410	300	Ø 315	Ø ¾"
4500	4400	2,7	790	530	300	Ø 350	Ø 1"
4900	4700	2,9	790	530	300	Ø 350	Ø 1"
5200	5200	3,2	1170	650	300	Ø 350	Ø 1"
5800	5800	3,5	1170	650	300	Ø 350	Ø 1 ¼"
7200	7000	4,3	1170	650	300	Ø 600	Ø 1 ¼"
7700	7700	4,7	1170	650	300	Ø 600	Ø 1 ¼"

EXTERNAL HEAT EXCHANGERS, "BAT-4R-AF" SERIES

Boxed air/water heat exchangers for air cooling, enclosed in a casing made of galvanized steel sheets, with both inlet and outlet circular connections. All heat exchangers are sized according to the following data:

- Inlet/outlet water temperature: 12/17 [°C];
- Inlet/outlet air temperature: 30/25 [°C].

Can be supplied with hot water to achieve heating instead of cooling (BAT-4R-AC).

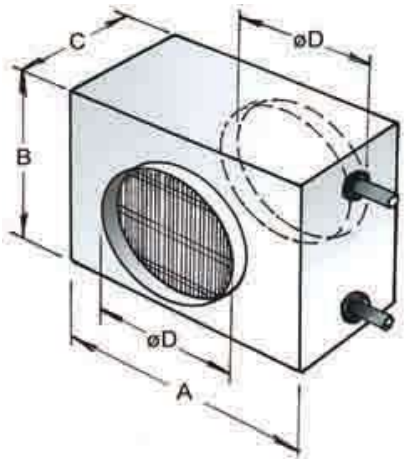

Taglia	Air [m³/h]	H_2O [m³/h]	A	B	C	Ø D	Ø conn.
700	600	0,4	410	350	300	Ø 150	Ø ½"
1000	1000	0,6	620	350	300	Ø 150	Ø ½"
1300	1300	0,7	620	350	300	Ø 250	Ø ½"
1600	1600	0,8	620	350	300	Ø 250	Ø ½"
2500	2400	1,2	790	410	300	Ø 315	Ø ¾"
2800	2700	1,4	790	410	300	Ø 315	Ø ¾"
3100	3100	1,6	790	530	300	Ø 350	Ø 1"
4500	4400	2,4	1170	650	300	Ø 350	Ø 1 ¼"
4900	4700	2,5	1170	650	300	Ø 350	Ø 1 ¼"
5200	5200	2,8	1170	650	300	Ø 350	Ø 1 ¼"
5800	5800	3,1	1170	650	300	Ø 350	Ø 1 ¼"
7200	7000	3,8	1170	650	300	Ø 600	Ø 1 ¼"
7700	7700	4,1	1170	650	300	Ø 600	Ø 1 ¼"

EXTERNAL FILTER MODULE "CFP" SERIES

Filter module consists of galvanized steel, circular connections inlet and outlet. Into the box filtering cells F6 - F7 - F8 - F9 on techical requests.

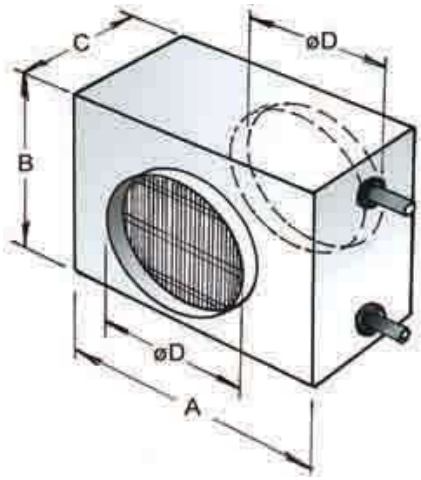

CFP	A	B	C	Ø D	FILTRO
700	240	240	200	Ø 150	240 x 240 x 25
1000	450	340	200	Ø 150	450 x 340 x 25
1300	450	340	200	Ø 250	450 x 340 x 25
1600	500	400	200	Ø 250	500 x 400 x 48
2500	500	400	200	Ø 315	500 x 400 x 48
2800	500	400	200	Ø 315	500 x 400 x 48
3100	500	400	200	Ø 315	500 x 400 x 48
3700	500	400	200	Ø 315	500 x 400 x 48
4500	630	500	200	Ø 350	625 x 500 x 48
4900	630	500	200	Ø 350	625 x 500 x 48
5200	630	500	200	Ø 350	625 x 500 x 48
5800	630	500	200	Ø 350	625 x 500 x 48
7200	630	700	200	Ø 600	625 x 700 x 48
7700	630	700	200	Ø 600	625 x 700 x 48

EXTERNAL FILTER MODULE "CFT" SERIES

Filter module consists of galvanized steel, circular connections inlet and outlet. Rigid pocket filters internal media card box with fiberglass pleated, plastic frame, polyurethane sealant. F6 - F7 - F8 - F9 class on techical requests.

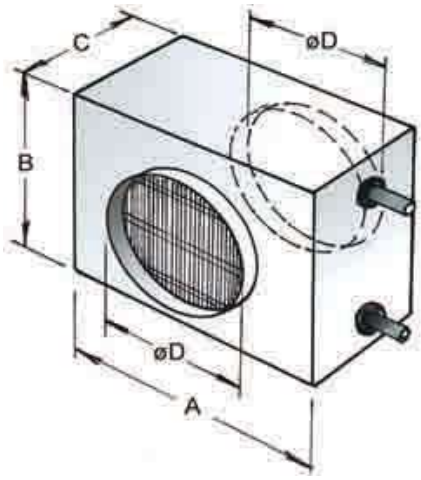

CFT	A	B	C	Ø D	FILTRO
700	300	300	400	Ø 150	296 x 287 x 290
1000	600	290	400	Ø 150	592 x 287 x 290
1300	600	290	400	Ø 250	592 x 287 x 290
1600	600	500	400	Ø 250	592 x 287 x 290
2500	600	500	400	Ø 315	592 x 287 x 290
2800	600	500	400	Ø 315	592 x 287 x 290
3100	600	500	400	Ø 315	592 x 490 x 290
3700	600	600	500	Ø 350	592 x 490 x 290
4500	600	600	500	Ø 350	592 x 592 x 290
4900	600	600	500	Ø 350	592 x 592 x 290
5200	600	600	500	Ø 350	592 x 592 x 290
5800	600	600	500	Ø 350	592 x 592 x 290
7200	880	700	400	Ø 600	592 x 592 x 290 592 x 287 x290
7700	880	700	400	Ø 600	592 x 592 x 290 592 x 287 x290